BEFORE THE BOARD OF DIRECTORS

OF THE

LINDMORE IRRIGATION DISTRICT

COUNTY OF TULARE, STATE OF CALIFORNIA

RESOLUTION OF THE BOARD OF DIRECTORS OF LINDMORE IRRIGATION DISTRICT ADOPTING THE 5-YEAR UPDATE OF THE DISTRICT'S AGRICULTURE WATER MANAGEMENT PLAN WITH THE REQUIRED SUPPLEMENTAL STATE OF CALIFORNIA INFORMATION

RESOLUTION NO.: 2017-04

WHEREAS, beginning in 2014 the District was required to adopt supplemental criteria required by the State of California to their future **Federal 5-Year Water Management Plan Update,**

WHEREAS, the supplemental State of California information has been completed and added to the 2015 Federal 5-Year Water Management Plan and at the direction of the Board was placed into public review on August 8, 2017

NOW, THEREFORE, BE IT RESOLVED, that the **Lindmore Irrigation District Water Management Plan** 5-Year Update along with the required State of California supplemental information, is adopted as presented and discussed at a noticed meeting scheduled for this date, is deemed acceptable and the Board of Directors finds that adoption of same is in the best interest of the Lindmore Irrigation District and its landowners:

RESOLVED FURTHER, that Michael D. Hagman, Manager-Secretary, is hereby authorized and directed to file said **Plan** on behalf of the Lindmore Irrigation District, with the State of California and any other government necessary and to execute such other documents as may be necessary to carry out the intent of this resolution:

THE FOREGOING RESOLUTION WAS ADOPTED upon motion of Director DePaoli, and seconded by Director Milanesio, it passed at the Regular Meeting of the Board of Directors held on September 12, 2017, by the following vote:

Ayes: Adam, Arnold, Brownfield, DePaoli, and Milanesio

Noes:

Absent:

Abstain:

Lindmore Irrigation District

John A. Arnold, President

CERTIFICATE OF SECRETARY

I do hereby certify that I am the Secretary of the Lindmore Irrigation District, an irrigation district organized and existing under the laws of the state of California, and that the foregoing Resolution was duly adopted by the Board of Directors of said District at a meeting thereof duly and regularly held at the office of the said District at 315 East Lindmore Avenue, Lindsay, California on the 12th day of September 2017, at which meeting a quorum of said Board of Directors was at all times present and acting, and that said Resolution has not been rescinded or amended in whole or any part thereof, and remains in force and effect.

IN WITNESS WHEREOF, I have hereunto set my hand and the Seal of the Lindmore Irrigation District this 12th day of September, 2017.

Michael D. Hagman, Secretary
Lindmore Irrigation District

2015 SBx7-7 Supplement Report

Additional Documentation to Accompany
Lindmore Irrigation District's Water Management Plan
Prepared for the U.S. Bureau of Reclamation

Submitted to:
California Department of Water Resources
Division of Statewide Integrated Water Management
Water Use and Efficiency Branch

August 2017

TABLE OF CONTENTS

1 – INTRODUCTION 1
Background 1
SBx7-7 Requirements 2
Water Measurement Methods 4
Current Status of other EWMP Compliance 5
2 – SUPPORTING DOCUMENTATION 7
A. Legal Certification and Apportionment Required for Water Measurement - Lack of Legal Access to Farm-gate 7
B. Engineer Certification and Apportionment Required for Water Measurement - Technically Infeasible 7
C. Description of Water Measurement Best Professional Practices 7
D. Documentation of Water Measurement Conversion to Volume 9
E. Device Corrective Action Plan Required for Water Measurement 10
4 – COMPLIANCE WITH EXECUTIVE ORDER B-29-15 11
Drought Management Plan 11
Quantification of Water Supply and Demands 13
5 – SCHEDULE, FINANCE PLAN, BUDGET 14

Attachments

1 - Water Management Plan Completed letter
2 - 2015 USBR Water Management Plan
3 - Agricultural Water Measurement Regulation
4 - District's meters installation typical drawings
5 - Water Meter Manufacturer's Sheets
6 - District's Rules and Regulations
7 – Monthly water bill example

1 – INTRODUCTION

Background

This document is intended to serve as the additional documentation that Lindmore Irrigation District (LID or District) must include with their United States Bureau of Reclamation (USBR) Water Management Plan (**Attachments 1 & 2**) and submit to the California Department of Water Resources (DWR) to document compliance with specified requirements of the Agricultural Water Measurement Regulations of Senate Bill X7-7 (SBx7-7). SBx7-7, the Water Conservation Act of 2009, mandates water conservation, measurement and reporting activities for urban and agricultural water suppliers. As discussed below, LID measures water deliveries at all farm-gate turnouts and satisfies the requirements of SBx7-7.

LID is a public irrigation district located in Tulare County. The District is primarily agricultural. The District was formed in 1937 under the California Irrigation Districts Act for the purpose of securing a supplemental water supply from the United States Bureau of Reclamation's (Reclamation or USBR) Central Valley Project (CVP. The District had no canal or ditch system and development had been brought about entirely by irrigation from privately owned wells. The District comprises approximately 27,256 gross acres, with approximately 23,740 acres able to receive irrigation water from the District.

In a typical year, LID diverts approximately 34,000 acre-feet of water and delivers it exclusively to agricultural users. The District does not supply any urban water. The District has a contract with Reclamation for 33,000 acre-feet (AF) of Class 1 and up to 22,000 AF of Class 2 water allocations from the Friant Division of the CVP with Class 2 water received in above normal water years up to the contract amount. The District water supply can be highly variable, ranging from 1,600 AF in drier years to over 42,000 AF in wetter years. The District typically delivers irrigation water during the months of April through November, but in water short years the irrigation delivery season may be as short as a month or two. The District currently collects the majority of its revenue from assessments that are levied on a per acre basis, with a portion of revenue collected through water delivery charges.

The District is a conjunctive use district, and water users in the District use both surface water from the District and private groundwater to supplement the surface water supply. The District is usually only able to supply a portion of the annual crop water needs of the typical grower in most years, and most growers must pump groundwater from privately owned wells to supply the remaining crop water demand when surface water is not available. The District distributes water supply through a closed, low-head piped system. Operational spills are minimal and are contained in regulating reservoirs which are placed in locations in the District designed to accept said waters and to recharge it to the groundwater aquifer (underground reservoir).

SBx7-7 Requirements

The SBx7-7 agricultural water measurement regulation is a part of the California Water Code §10106.48(b) (1), Article 2, §597. SBx7-7 requires agricultural water suppliers serving more than 25,000 acres to prepare agricultural water management plans and implement efficient water management practices (EWMP), including water delivery measurement and volumetric pricing for water that the water supplier delivers to its customers. On the other hand, Article 2, §597.1. Applicability (e) - stipulates the following: "An agricultural water supplier providing water to 10,000 or more irrigated acres but less than 25,000 irrigated acres, excluding acres that receive only recycled water, is not subject to this article unless sufficient funding is provided specifically for that purpose, as stated under Water Code §10853." See details in **Attachment 3**. Subsequently Executive Order B-29-15 extended the requirement for preparation of agricultural water management plans to any water supplier providing water to 10,000 or more irrigated acres, which LID was already in compliance with.

During the last 10 years, LID has provided water to less than 25,000 irrigated acres (see **Table 1** below) and has never received any funding for the purpose of implementing water measurement. Therefore the District does not have an obligation to implement the water measurement requirements according to California Water Code §10106.48(b) (1), Article 2, §597.

Table 1: Lindmore Irrigation District 10 Years Irrigated Acreage 2005 - 2015

Years	Irrigated acres
2005	23,685.37
2006	23,345.02
2007	23,372.05
2008	23,776.15
2009	23,720.04
2010	23,724.61
2011	23,750.14
2012	23,725.14
2013	23,810.22
2014	23,991.61
2015	24,241.32
Average	**23,740.15**

As a CVP contractor, the District already measures water at the individual grower turnout and collects a portion of its revenue based on the quantity of water delivered to its growers. Even though the irrigated acreage served by the District is below 25,000 acres, the current means of measurement employed by LID to measure water deliveries at the farm-gate level does, as discussed below, meet the accuracy requirements of SBx7-7. Hence LID is currently in compliance with SBx7-7's requirements for EWMPs regarding water measurement at delivery points and implementation of a volume-based pricing system to customers.

SBx7-7 describes sixteen EWMPs aimed at promoting efficient water management. Of these, two are considered "critical" or mandatory, and the remaining fourteen are considered "conditional". The EWMPs that are to be implemented to comply with SBx7-7 include:

- Measure the volume of water delivered to customers with sufficient accuracy to comply with California Water Code §531.1 for aggregated farm-gate delivery reporting, and
- Adopt a pricing structure for water customers based at least in part on the quantity of water delivered (collecting some revenue on a per AF basis), and
- Implement 14 additional efficient water management practices if technically feasible and locally cost effective.

The final water measurement regulation prepared by DWR (approved July 11, 2012) requires measurement at the location where the agricultural water supplier transfers control of delivered water to a customer or group of customers. In most cases, the transfer of control occurs at the farm-gate, but the regulation does allow for measurement upstream in a lateral under certain conditions. Regardless of where the measurement is made, the following numeric accuracy standards apply to the volume of delivered water:

- Existing measurement devices shall be certified to be accurate within 12%± by volume.
- New or replacement measurement devices shall be certified to be accurate within 5%± by volume in the laboratory if using a laboratory certified device (such as propeller meters) or 10%± by volume in the field if using a device that is non-laboratory certified (such as meter gates).

The regulation requires a water supplier to measure water delivery volumes at the individual delivery point or farm-gate, unless measurement is not possible at the farm-gate and must be moved upstream on a lateral because, (a) the agricultural water supplier does not have legal access to the delivery points of individual customers (farm-gates) downstream of a point of measurement (such as the lateral head works), or (b) the measurement accuracy cannot be met, as approved by an engineer, due to small differentials in water level or large fluctuations in flow rate or velocity that occur during the delivery season at a single-farm gate. If measurement does not occur at the

individual farm-gate and instead gets measured at the lateral headworks, the water supplier shall explain the reasoning and document the criteria used to apportion the volume of water delivered to individual downstream customers.

For existing measurement devices, the regulation provides two options for initial certification of existing accuracy (measurement devices existing prior to adoption of regulation), and this certification must be submitted to DWR:

a) Field-testing that is completed on a random and statistically representative sample of the existing measurement device by individuals trained in the use of field-testing equipment, and documented in a report approved by an engineer, with field testing performed for a sample of devices following certain criteria. The sample size recommended by DWR is at least 10% of existing devices, with a minimum of 5, and not to exceed 100 individual devices for any particular device type.

b) Documentation by field-inspections and analysis completed for every measurement location to demonstrate that the design and installation standards used for the device installation meets the 12%± accuracy standard, and that operation and maintenance protocols meet "best professional practices". Field-inspections and analysis protocols shall be performed by trained individuals and documented in a report approved by an engineer.

The fact that the District is providing irrigation water to less than 25,000 irrigated acres, and also because of the cost involved with the water measurement devices certification process, no certification process was put in place by the District. However, the District operation and maintenance approach allows the District to have water measurement devices that are operated and maintained to a reasonable degree of accuracy, under most conditions, to +/- 6%. In addition, and as mentioned in the AWMP, newly installed magnetic meters are certified by the manufacturer to have an accuracy of +/-3%, while the propeller meters accuracy is +/- 5%. Installation of the meters follows manufacturer recommendations. Drawings of typical meter installations are included in **Attachment 4**.

Water Measurement Methods

As a CVP contractor, the District already measures water at the individual grower turnout and collects a portion of its revenue based on the quantity of water delivered to its growers. The District currently has 1,217[1] active growers' turnouts that deliver irrigation water to a total of 998 farms, all of which are currently either metered or measured. The District uses two different types of measurement devices at the farm-gate turnout level – propeller meters and magnetic inductive meters. District on-going efforts in improving water measurement are discussed later in this document.

Below is a brief explanation of each type of measurement device used by the District:

[1] When the AWMP was prepared, the number of delivery points was 1,215.

Propeller Meter

Propeller meters are very common and extensively used by agricultural water suppliers. The District uses two models of propeller meters: the original Sparling meter that the district is phasing out, and McCrometer model MT100 and MW500 in-line meters. This type of meter contains a propeller that protrudes into a pipe connected by a cable or shaft to a meter readout. As the water passes by the propeller, the propeller rotates. The number of revolutions is then calibrated for the pipe size to determine a flow rate, and most propeller meters indicate the flow rate as well as accumulate the volume of water delivered. Propeller meters can be saddle-type in-line meters that attach directly to a pipeline, or an open-flow type meter that is typically installed at canal turnouts in a standpipe at the end of a pipe section. LID does not have any open-flow type meters. Propeller meters require a certain obstruction-free distance upstream and downstream of the meter to ensure accuracy, and a full pipe at the location of the meter is required. Trash in the water is one of the biggest concerns with propeller meters since any trash that accumulates on the propeller can cause the meter to read inaccurately and can cause significant head loss.

Magnetic Inductive Flow-meter

The District recently began installing Seametrics AG2000 Irrigation Magmeters to replace outdated inline and vertical Sparling propeller meters (no parts available). The AG2000 is a spool-type electromagnetic flow-meter for use in irrigation applications. With no moving parts, these meters provide unobstructed flow and are resistant to wear from debris found in surface water. Little maintenance is required because there are no bearings to wear out or propellers to stop turning. Minimal straight pipe requirements allow AG2000 meters to be used in piping configurations where there is little space between the meter and an elbow.

Current Status of other EWMP Compliance

The District has already implemented the “conditional” EWMPs identified in Water Code §10608.48 that are cost effective and technically feasible. EWMPs already implemented by the District or EWMPs that do not apply, as discussed in the District's 2015 USBR WMP, include:

- No. 1: Alternative land use *(USBR WMP Sec. 3B1 & 3B3)*
- No. 2: Recycled water use *(USBR WMP Sec. 3B2 & 3B4)*
- No. 3: On-farm irrigation system improvements *(USBR WMP Sec. 3B5)*
- No. 4: Incentive pricing structure *(USBR WMP Sec. 3A4 & 3B6)*
- No. 5: Distribution System improvements *(USBR WMP Sec. 3B7)*
- No. 6: Order/delivery flexibility *(USBR WMP Sec. 3B8)*
- No. 7: Supplier spill and tailwater systems *(USBR WMP Sec. 3B9)*
- No. 8: Conjunctive use *(USBR WMP Sec. 3B11)*

- No. 9: Automated canal controls *(USBR WMP Sec. 3B12)*
- No. 10: Facilitate customer pump test/evaluations *(USBR WMP Sec. 3B13)*
- No. 11: Designate a Water Conservation Coordinator *(USBR WMP Sec. 3A2)*
- No. 12: Water management services to customers *(USBR WMP Sec. 3A3)*
- No. 14: Supplier pump efficiency *(USBR WMP Sec. 3A5)*

The only "conditional" EWMP that was not directly addressed in the 2011 USBR WMP was No. 13 - *Evaluate the policies of agencies that provide the supplier with water to identify the potential for institutional changes to allow more flexible water deliveries and storage*. The District is a USBR CVP contractor and as such, is subject to the water delivery rules and regulations imposed by the USBR. The District has very little ability to impact USBR policies and regulations. The District does stay engaged in issues that affect the District's water supply, such as the San Joaquin River Restoration Settlement, and fights to protect its water supply.

2 – SUPPORTING DOCUMENTATION

Following are discussions on required Agricultural Water Measurement Regulation Documentation (as applicable) for compliance with SBx7-7.

A. Legal Certification and Apportionment Required for Water Measurement - Lack of Legal Access to Farm-gate

Not applicable - The District has legal access to measure water at all of the District farm-gates. There are a few instances where a private pipeline after the turnout may serve more than one grower, but the District does not allow more than one grower to irrigate at a time so measurement can be made at the turnout meter.

B. Engineer Certification and Apportionment Required for Water Measurement - Technically Infeasible

Not applicable – The District measures water at each farm-gate. There are no turnout locations that are technically infeasible to measure.

C. Description of Water Measurement Best Professional Practices

Description of District Operations

One hundred percent (100%) of the agricultural water deliveries within LID are measured either with propeller meters (97.6%) or Magnetic meters (2.4%) and 100% of water deliveries are billed by volume. The District employs six water deliverers or Meter reader's staff that routinely time the flow in District meters to confirm totalizer accuracy. Since 2014, any new turnout is equipped with a Magnetic meter and is installed consistent the manufacturer recommendation **(see Attachment 5).**

As of 2017, there are 1,207 turnouts for 1,217 delivery points within LID. 1,176 propeller meters and 31 magnetic meters have been installed on each turnout. In some instances a private pipeline after the turnout may serve more than one grower, which explains the difference between the delivery points and turnout totals (some turnouts serve more than 1 delivery point), but the District does not allow more than one grower to irrigate at a time so measurement can be made at the turnout meter.

All water allocated to the District by Reclamation is pro-rated to each acre of land within the District equally according to the latest Assessed Valuation of the land. No water is apportioned to parcels of five acres or less unless a specific request is made by the landowner. See Rules and Regulations, Attachment 6. Therefore, once a landowner requests the land to receive an allocation, the land will be placed in the District's assessment roll and be assessed annually the Stand-by charge and will receive an allocation each year as long as payments are current. Since 2009, LID has used a water data management system for water usage information and accounts (WDM). LID's primary water function is to meter water deliveries to all water users and to bill accordingly. In addition, years like 2014 and 2015 with no water available from Friant

Division resulted in significantly more water transfers and introduced many additional types or categories of water, each with unique associated costs. The District in these cases requests a subscription from willing growers to look for alternative water sources.

As mentioned before, the District uses a water data management (WDM) software to manage all water transactions (allocations, orders, transfers, deliveries, etc.) and most financial transactions (billings, cash receipts, and accounts receivable). A separate accounting program would be used to handle general ledger, accounts payable, and payroll transactions. The District WDM uses features to facilitate the management of parcel, water user name, field, and turnout information.

Water may be transferred from one parcel of land to another and from one landowner to another, within the District. Water transfers to and from the District are subject to Reclamation's Friant Division Water Operations Policy. Landowner/grower transfers are allowed into the District, but not from the District since the District is typically water short.

All LID water information such as turnout deliveries, allocations, transfers, etc. is managed with the WDM software. This data is available to growers in a variety of formats. Data regarding water usage and remaining water quantities is routinely distributed on a monthly basis and is also made available upon request. WDM can accommodate the tracking of water usage data to the field level if field information is supplied when water is ordered. Because of the very high cost and typical scarcity of water within LID, water use efficiency and accurate and timely water measurement information is extremely critical to the District and all water users. Water delivery information from LID turnouts is available from 2009 to the present. This data has been computerized and is available upon the request of a landowner or water user.

Collection of Water Measurement Data

Water meters at each operating turnout are read on a daily basis and following each irrigation, referred to as a turn-off event. The water deliveries are summarized and billed to each water user on a monthly basis. Any discrepancy must be addressed with the District prior to the 25th day of the month following billing. Use records are computerized and are maintained in the office of the District. All meters are then read after the final delivery of District water (usually after Thanksgiving week of each year) and compared to the last prior reading. Any unrecorded use of water is then recorded and billed.

Frequency of Measurements

The District relies upon daily readings taken by Meter reader's staff to record the necessary data required to determine volumetric water deliveries to landowners. LID staff takes field readings daily for all turnouts delivering water. The cumulative meter reading is recorded once a day, and the flow rate is verified when the meter reading is taken. Meter reader's staffs are required to record the beginning date and time and the stop date and time of each irrigation run at each individual farm-gate turnout. If a landowner must stop and restart his/her irrigation the Meter reader's staff must

coordinate this with the landowner and record such data. By recording the start, stop and potential interruption dates and times, the Meter reader's staff is able to establish the run period (hours) that the landowner is utilizing water. All information that is collected is converted into a volumetric rate of use to allow comparison with the aggregated total recorded by the meter. Each day as the Meter reader's staffs attend office meetings, the information is logged into the District WDM Software.

Method for Determining Irrigated Acres

LID performs a crop survey at the end of each water year to determine cropping trends and the total irrigated acreage. The District also determines the irrigated acres based on the assessment and allocation comparisons.

Quality Control and Quality Assurance Procedures

A range of expected flow rate has been established by the District for each individual turnout through USBR and the District distribution system design.

A flagging system for the District to review and override the meter reading difference, if needed, is based on a mental assessment that the reading "makes sense" by the person entering in the meter readings into the system.

Also, based on the customer's order (required flow and duration), the WDM program estimates the amount of acre-feet to be used. At the closing reading at the end of the irrigation season, the recorded flow rate and volume is checked against the WDM estimation to see if it's outside the expected range for that turnout. If a discrepancy is noted, a verification process is initiated with the ditch tender responsible for the particular turnout to check the runtime and flow in order to make the corresponding adjustments. Otherwise, if no error is found in the runtime and flow recorded by the ditch tender then the problem is from the meter and a repair order is issued. The necessary correction is implemented based on historical average and is added to the grower monthly bill as shown in **Attachment 7**.

Growers also play an important role in quality control, and notify the District when volumetric charges appear erroneous. The District deals with the Growers' claims, by checking the reading meter and making any appropriate changes.

D. Documentation of Water Measurement Conversion to Volume

The type of meters used by the District automatically accumulates the volume of water delivered at that location. The District records the flow rate and the cumulative volume meter reading each time a meter is read, generally on a daily basis. If a meter plugs, and the accumulation of volume delivered stops in between readings, the previously recorded flow rate can be utilized to estimate the volume delivered over the time frame between readings. Another corrective action to remediate this situation is to estimate the flow rate using line pressure and then a meter repair order is created. The WDM program automatically calculates the expected volume that would have been delivered based on the flow rate and time duration and checks that against the difference in meter

readings. Any significant variance is flagged for the District to review and override the meter reading difference, if needed.

E. Device Corrective Action Plan Required for Water Measurement

Historically, the District has tested meters only on an “as needed” basis (when a meter was not working or known to be inaccurate) and has not maintained consistent calibration records. The propeller meters are currently brought to Techno-flow (McCrometer in Porterville, CA) to inspect the meters, replace what is needed, and then calibrate each meter. Three meters were tested about seven years ago through Water Specialties / Techno-flow in Porterville with accuracy within 5%.

The District operation and maintenance protocol for delivery measurement devices is to fix when broken or replace batteries on mag meters. The District will also replace outdated (no parts available) meters. If any meter(s) are found to be not working or inaccurate during the irrigation season, the meter will be removed and a spare replacement meter will be installed until the original meter can be repaired. The repair or replacement of the measurement devices involves rebuilding, replacing gears, batteries, pipe, steelwork, and weirs. Replacing a meter with an upgrade, involves rebuilding the line to accommodate the new type of meter. The district is repairing the meters in its shop, if necessary. According to the District 2015 WMP, within 3 years, a total of 353 devices were repaired and a total of 12 were replaced. In addition, new meters are purchased with laboratory certified accuracy within +/- 3%. Water meter manufacturer’s sheets are provided in **Attachment 5**.

4 – COMPLIANCE WITH EXECUTIVE ORDER B-29-15

Executive Order B-29-15, signed by Governor Brown on April 1, 2015, required agricultural water suppliers that provide water to more than 10,000 acres to prepare an Agricultural Water Plan as well as prepare a Drought Management Plan. As a USBR contractor, the District has prepared water management plans for many years (see **Attachments 1 and 2**). Below is a Drought Management Plan for the District.

Drought Management Plan

As a conjunctive use district with a highly variable surface water supply, the District and its water users are constantly juggling supply and demand. In most years, there is usually more demand for surface water than there is supply, so proper water management is critical. Water users in the District must have a private deep well in order to supplement surface water available from the District. The irrigated acreage within the District is primarily comprised of permanent tree crops, so the water demand is fairly consistent from year to year.

The water supply available to the District is extremely variable. In wet years as much as 42,350 AF (1.8 AF/acre) has been available for delivery to the District irrigated land. In average years the water supply is about 34,000 AF (1.4 AF/acre). In critically dry years the surface water supply can be virtually non-existent as evidenced in 2014 and 2015, when only 1,649 AF (0.07 AF/acre) of surface water was available. Even in above normal years the District conveyance system can only supply approximately 30 to 40% of peak demand, so water users must supplement the District supply with groundwater during peak periods and when surface water is not available from the District.

As a CVP contractor in the Friant Division, the District's annual water supply allocation is determined by the USBR, and the District has virtually no ability to change the available water supply for a given year other than to carryover some water from the previous year. The USBR typically makes an initial water supply allocation in late January, and will adjust the allocation as the water year progresses if warranted by the snow pack in the Sierra Mountains and the projected water supply. The final water supply allocation available to the District is often not known until July. Each time the water supply allocation is changed by the USBR, the District will notify all water users so they can plan accordingly.

If forecasts indicate water will be available throughout the year, deliveries are scheduled to begin on or about the first of March and continue until late fall. When forecasts indicate water will not be available throughout the year, the period of mid-June through mid-August is given priority when scheduling water for delivery.

The District will facilitate and encourages landowner to landowner transfers of water into the District if a water user requests to bring water into the District. The District coordinates with other local water agencies and the USBR as needed to facilitate requested transfers.

In below normal and drought years, the District will minimize expenditures as much as possible to reduce operating costs. The District collects revenue through both acreage based assessments and volumetric water charges based on the quantity of water delivered, measured in acre-feet. The volumetric water rate is established each year to cover projected expenditures that exceed the revenue collected through the acreage based assessments. The water rate is based on a melded rate of the various water supplies available to the District.

Any water shortage declaration by Reclamation is treated the same way as the annual allocation; that is, each year's allotment is pro-rated out to the District growers. The District will equally, to each acre of assessed land, allocate the total supply available. In any short water year, growers can make up the difference with private wells or purchase water from the District Pool, which is water returned to the District by growers not needing their full allotment in the current year. In years when there is virtually no allocation (Water Years 2014 and 2015), the District will search for water available from any source and sell it to its growers by subscription as requested.

The District's available surface water supply is below the consumptive demand of the crops grown, even in normal years. Wet year water supplies are also allocated equally to all lands. Any water found to be wasted, such as field runoff to roadways, broken ditch banks, clogged siphon or sprinkler pipes, is reported to the responsible farm operator and is taken care of immediately. No enforcement policy has ever had to be put in place to address this situation. The power to generate specific enforcement regulations is contained in Number 21 of the District's Rules and Regulations. That document is contained herein in **Attachment 6.** This document is continuously reviewed by the Board of Directors and is amended and approved entirely as needed. It is transmitted to each landowner on an annual basis prior to the delivery of water.

Conjunctive use was a principal issue when the District's distribution system was designed and constructed by the Bureau. When Friant Division-CVP water is available, water users are encouraged to use it and reduce or stop their groundwater pumping. This is accomplished by adjusting the quantity of water that is allocated to each acre of land each irrigation season. The water users have the option to use the water or transfer its use within the District. Any unused water is billed at the end of the season. As the District's water supply is supplemental, access to a well to extract water from the underground is required. The aquifer underlying the District is recharged by reducing private pumping when supplemental surface waters are available, from precipitation and percolation from the Kaweah River, Tule River, Lewis Creek and Frazier Creek.

The principal basis of the District's policy requiring payment for water whether delivered or not is simple: to insure delivery of every drop of allocated supply into the District. The allocated surface water supply is supplemented with inbound transfers whenever possible. Over time, policy modifications have been put into place to insure equity with respect to fallow lands, lands with new crops planted and growers electing, some for infiltration purposes, to utilize some groundwater to meet total demand requirements.

Exchanges and transfers between growers are allowed and the general return pool has been in place for a number of years. Each of these provisions allows for the objectives of the District to remain in place without punitive repercussions. The only example where conservation is not optimized is where a grower has a marginal well, does not want to or cannot replace it at that exact time and elects to hold on to the supply in case the well fails. The water is, however, not lost if not used by year-end. It must be paid for, but can be carried over behind Friant Dam, transferred or exchanged into a subsequent year. Conservation objectives are still achieved.

Quantification of Water Supply and Demands

In accordance with Executive Order B-29-15, quantification of water supplies and demand is to be reported for 2013, 2014 and 2015 to the extent data is available. Information on recent water supply and estimated demand for the District is as follows:

Water Budget Summary (AF)			
Water Accounting	2013	2014	2015
1 District Water Supplies	28,704	1,904	1,649
2 Water Uses / Demand	73,350	73,273	73,524
The shortage between supply and demand is met by private groundwater pumping.			

5 – SCHEDULE, FINANCE PLAN, BUDGET

The District's water measurement program on-going operations and maintenance (O&M) costs are funded through the District's existing water assessments and volumetric toll rates. Compliance with the "conditional" EWMPs has already been incorporated into the District's operating budget as discussed in the attached 2015 AWMP.

ATTACHMENT 1 - WATER MANAGEMENT PLAN COMPLETED LETTER

United States Department of the Interior

BUREAU OF RECLAMATION
Mid-Pacific Regional Office
2800 Cottage Way
Sacramento, CA 95825-1898

RECEIVED
DEC 0 6 2016
BY: MR

IN REPLY REFER TO:

Michael Hagman
General Manager
Lindmore Irrigation District
P.O. Box 908
Lindsay, CA 93247-0908

NOV 3 0 2016

Subject: Water Management Plan-Lindmore Irrigation District

Dear Mr. Hagman:

The Bureau of Reclamation is pleased to inform you that Lindmore Irrigation District's updated Water Management Plan (Plan), including the latest submitted changes and supplements, meets the requirements contained in the 2014 Standard Criteria.

Your Plan was published in the *Federal Register*. Congress established the *Federal Register* publication system as a method of informing the public of the regulations affecting them. Actions published in the *Federal Register* are available to the public and are subject to the Freedom of Information Act. No comments were received for your Plan and the review process is officially completed.

Reclamation appreciates the effort committed to preparing the Plan. In addition to completing your Plan, Annual Updates must be submitted to remain in compliance with your contract. These are to be completed at the following Web sites: www.agwatercouncil.org. If you have any questions, please contact Gene Lee, Water Conservation Specialist, (916) 978-5219 or glee@usbr.gov.

Sincerely

ACTING FOR

Richard J. Woodley

Regional Resource Manager

ATTACHMENT 2 - 2015 USBR WATER MANAGEMENT PLAN

FIVE YEAR UPDATE

AGRICULTURAL WATER MANAGEMENT PLAN
2014 Criteria (December 15, 2015 version)

LINDMORE IRRIGATION DISTRICT

Draft v1 – DECEMBER 11, 2015
Draft v2 – FEBRUARY 12, 2016
Draft v3 – MARCH 11, 2016
Date of final –

Index

Page

Introduction

Facilities Evaluation

Section 1: Description of the District 1-1

Section 2: Inventory of Water Resources 2-1

Section 3: Best Management Practices (BMPs) for Agricultural Contractors 3-1

Section 4: Best Management Practices for Urban Contractors 4-1

Section 5: District Water Inventory Tables 5-1

Plate 1 District Location Map

Attachment A District Facilities Map

Attachment B District Soils Map

Attachment C District Rules and Regulations

Attachment D District Sample Bills

Attachment E District Map of Groundwater Facilities

Attachment F Notices of District Education Programs and Services Available to Customers

Attachment G District Agricultural Water Order Form

Section 1: Description of the District

District Name: *Lindmore Irrigation District*

Contact Name: Michael D. Hagman

Title: General Manager

Telephone: (559) 562-2534

E-mail: mhagman@lindmoreid.com

Web Address www.lindmoreid.com

A. History

1. Date district formed: 3/ 6/ 1937 *Date of first Reclamation contract*: 2/28/49
Original size (acres): 27,256 *Current year (last complete calendar year)*: 2015

The Lindmore Irrigation District (District) is a political subdivision of the State of California. The District was organized March 6, 1937, for the purpose of securing a supplemental water supply from the United States Bureau of Reclamation's (Reclamation) Central Valley Project (CVP). The District was organized under California laws pertaining to the formation and operation of irrigation districts. The District had no canal or ditch system and development had been brought about entirely by irrigation from privately owned wells. Early settlers found groundwater plentiful at shallow depths. Increased development and pumping lowered groundwater year after year. Dry years and an increased acreage in cultivated crops resulting from war demand reduced the underground supply to an alarming degree.

Accordingly on February 28, 1948, Contract No. 174r-1635 was entered into with Reclamation, for a water supply from the Friant-Kern Canal which is a unit of the Friant Division of the CVP, Mid Pacific Region. The contract was also for the construction of a concrete pipe distribution system. The contract was amended June 13, 1952, March 12, 1957, June 9, 1959, November 18, 1960, July 10, 1989, and Renewed September 28, 1990. This contract was voided by court action. A subsequent Long-term Renewal Contract was entered into on March 1, 2001. Finally, on November 1, 2010 the District entered into a "perpetual" 9(d) contract with the USBR (175r-1635D)

The first orange trees were planted in the area in 1880. The first irrigation wells tapped the shallow underground supply in 1895, thus triggering the intensive development of the area. The landowners/growers in the district, through the use of ingenuity, technical knowledge, farming know-how and private capital have been able to take a firm project water supply, relatively shallow

soils and favorable climatic conditions and build a highly productive agricultural industry.

Rail transportation for the district is furnished by Kyle Railways. Principal shipping points and market outlets are the towns of Lindsay and Strathmore, requiring an average truck haul of about 6 miles from the farms in the District. Highway transportation being the predominant method, is facilitated by two main state highways and a system of improved county roads.

Industrial development in the District area is centered on the processing of agricultural products. The marketing of the agricultural commodities grown in the District passes through regular established channels.

The demand for hired labor peaks normally in January, June, July, October and November, with minimum requirements occurring in early April and September.

The history of groundwater use in the District has been one initially associated with fairly rapid development. When irrigated agriculture started, about 1890, groundwater stood about 20 feet below the surface. By 1917, a considerable area within the District was being irrigated from wells, causing the water table to drop. This drop was greatest in the area of heaviest pumping. This water table depression has been termed the "Lindsay Cone of Depression" or simply "the Cone".

The Cone is bounded on the west by a groundwater divide, creating a closed basin that probably has been in existence for many years. Additional recharge of the Lindsay Cone area by reason of Central Valley Project deliveries tends to refill this groundwater depression. The annual replenishment to groundwater was historically proportional to the flow of the Kaweah and Tule Rivers for the same year, which of course was proportional to the precipitation for that year.

The fluctuations in groundwater levels are dependent upon the nature of the sediments and the rate and quantity of pumpage. Maximum vertical movement of the water table is greatest near the center of the cone, least near the perimeter. The water level drops quickly when a large water demand is made upon the sediments of low storage capacity found in the central part of the District.

Since 1922, mean depth to water since 1921 has been a function of Central Valley Project water deliveries since 1950, depth to groundwater and acres irrigated. The effect of project water deliveries was very apparent in that, in 1958, the mean depth to water over the entire District had risen approximately 50 feet since surface water deliveries started. At the original center of the cone of depression east of Lindsay, the rise was approximately 100 feet. The character and position of the cone of depression changed materially with the delivery of contract supply. The drop in the water table was initially due to pumping for irrigation. The rise has been attributed directly to Central Valley Project water deliveries.

Until 1950, groundwater was the major source of irrigation supply and water levels dropped. In 1917 the cone of depletion, centered east of Lindsay, and was confined to a relatively small area. By 1946, the irrigated acreage had increased from approximately 14,000 to 19,500 acres. The center of the cone had moved west of Lindsay and dropped another 75 feet. The groundwater divide located on the west side of the cone of depression had also dropped 25 feet. Thus, there was every indication of a serious groundwater overdraft in the District and that water was being "mined" or permanently removed from storage and eventually some lands would revert to dry-farming unless a supplemental supply was obtained.

The urgently needed supplemental supply, by means of the Central Valley Project water deliveries, was started in 1950 and reached the maximum under the existing contract by 1954. By 1957, the cone of depression had filled approximately 110 feet. The character of the slopes on the perimeter of the cone had flattened and the groundwater divide on the west side of the cone had dropped another 30 feet. By 1958, re-establishment of the westward movement of groundwater across the old groundwater divide into areas to the west of the District had occurred.

The lowering of the groundwater divide west of the District undoubtedly would have occurred irrespective of project construction. Consequently, estimates of safe groundwater yield were based on the assumption that this barrier would have been removed, resulting in a material reduction, if not the entire elimination, of the District's source of water supply from the west and a corresponding reduction in the firm groundwater supply.

The District is governed by a board of five (5) directors elected for four-year terms on a staggered basis of two and three, at elections called every two (2) years. The District Board of Directors appoints a General Manager, Assessor, Collector, Treasurer, Legal Counsel, Secretary and Engineer.

2. *Current size, population, and irrigated acres*

	(2014)
Size (acres)	27,256
Population served	0
Irrigated acres	23,345

3. *Water supplies received in current year*

Water Source	*AF*
Federal urban water	
Federal agricultural water	
State water	

Other Wholesaler	
Local surface water	
Upslope drain water	
District ground water	
Banked water	
Transferred water	2,059
Recycled water	
Total	2,059

4. *Annual entitlement under each right and/or contract*

	AF	*Source*	*Contract #*	*Availability period(s)*
Reclamation Urban AF/Y				
Reclamation Agriculture AF/Y	33,000	CVP - Class 1	175r-1635D	Year Round
Reclamation Agriculture AF/Y	22,000	CVP - Class 2	175r-1635D	Year Round
Other AF/Y		None		

5. *Anticipated land-use changes*

None.

6. *Cropping patterns (Agricultural only)*

List of current crops (crops with 5% or less of total acreage) can be combined in the 'Other' category.

Previous Plan (2010)		*Current Plan (2014)*	
Crop Name	*Acres*	*Crop Name*	*Acres*
Alfalfa	1,527	Alfalfa	1,325
Grapes	1,502	Grapes	1,580
Olives	4,338	Olives	3,850
Oranges	11,760	Oranges	12,086
Corn	1,395	Corn	1,520
		Nuts	1,450
		Tree Fruit	1,250
		Other (5%)	284
Other (<5%)	3,219		
Total	23,741	*Total*	23,345

(See Planner, Chapter 2, Appendix A for list of crop names)

7. *Major irrigation methods (by acreage) (Agricultural only)*

Previous Plan (2010)		*Current Plan*	
Irrigation Method	*Acres*	*Irrigation Method*	*Acres*
Low Volume	15,034	Low Volume	16,149

Furrow	7,443	Furrow	6,244
Flood	1,006	Flood	851
Other	258	*Other*	101
Total	24,220	*Total*	23,345

(See Planner, Chapter 2, Appendix A for list of irrigation system types)

B. Location and Facilities

See **Attachment A** for points of delivery, turnouts (internal flow), and outflow (spill) points, measurement locations, conveyance system, storage facilities, operational loss recovery system, wells, and water quality monitoring locations.

1. Incoming flow locations and measurement methods

Location Name	*Physical Location*	*Type of Measurement Device*	*Accuracy*
Friant-Kern Canal	FKC Mile Post 88.40 Gravity	Venturi Meter	±2%
Friant-Kern Canal	FKC Mile Post 90.40 Gravity	Venturi Meter	±2%
Friant-Kern Canal	FKC Mile Post 93.20 Gravity	Venturi Meter	±2%
Friant-Kern Canal	FKC Mile Post 93.20 West Pump 1	Propeller Meter	±2%
Friant-Kern Canal	FKC Mile Post 93.20 West Pump 2	Propeller Meter	±2%
Friant-Kern Canal	FKC Mile Post 93.20 East Pump	Propeller Meter	±2%

2. Current year Agricultural Conveyance System

Miles Unlined - Canal	*Miles Lined - Canal*	*Miles Piped*	*Miles - Other*
None	None	123	None

3. Current year Urban Distribution System

Miles AC Pipe	*Miles Steel Pipe*	*Miles Cast Iron Pipe*	*Miles - Other*
N/A	N/A	N/A	N/A

4. Storage facilities (tanks, reservoirs, regulating reservoirs)

Name	*Type*	*Capacity (AF)*	*Distribution or Spill*
93.2E North	Regulating	Combined Capacity is 22 Acre Feet.	Distribution
93.2E South	Regulating		Distribution
88.4 Montgomery	Regulating		Distribution
88.4 Noal	Regulating		Distribution
90.4 Brewer	Regulating		Distribution

5. Outflow locations and measurement methods (Agricultural only)
Provide this information in Section 2 F.

There are no outflow locations. There are no District outflows.

6. *Description of the agricultural spill recovery system*

System periodic operational spills are limited to District owned reservoirs which are equipped with pump recovery systems.

7. *Agricultural delivery system operation (check all that apply)*

On-demand	*Scheduled*	*Rotation*	*Other (describe)*
	✓		

8. *Restrictions on water source(s)*

Source	*Restriction*	*Cause of Restriction*	*Effect on Operations*
Friant-Kern Canal	Delivery Reduction	Capacity Constraints	Increase in private groundwater pumping.

9. *Proposed changes or additions to facilities and operations for the next 5 years*

Proposed improvements to the District's system over the next five (5) years include the continued replacement of a defined percentage of the ageing distribution system.

C. Topography and Soils

1. *Topography of the district and its impact on water operations and management*

The District lies at the base of the western foothills of the Sierra Nevada, on the east side of the San Joaquin Valley. It extends from two (2) miles north of Lindsay, site of the District office, southward roughly 1½ miles south of Strathmore, a distance of about nine (9) miles. The District's greatest width east and west is about 10 miles. The topography of lands within the District varies in elevation from 375 feet along the northeastern boundary to 500 feet along the southeastern boundary. The ground surface slopes to the west at about 15 feet per mile. The southeastern portion lying east of the railroad and above the Friant-Kern canal, extends back into the foothills where the topography is rougher, with slopes varying from 20 to 100 feet per mile. Surface drainage is provided by natural slope of the land and is accumulated in small intermittent streams. There are no topography impacts on water operations and management procedures of the District.

2. *District soil association map (Agricultural only)*

See **Attachment B**, District Soils Map.

GENERAL

The soils in the Lindmore Irrigation District (District) are of several classes. 5,709 acres have been designated Class 1 with 11,187 acres designated as Class 2. Class 3 lands constitute 10,156 acres with the balance principally designated Class 6.

DESCRIPTIONS OF INDIVIDUAL LAND CLASSES

Class 1 lands contain a complex mix of soil types. The largest concentration of Class 1 lands, lie immediately to the west of the City of Lindsay. Smaller areas and stringers are widely and evenly distributed throughout the balance of the District. The predominant Class 1 soils are: Honcut sandy loam, Greenfield sandy loam, Exeter loam, San Joaquin loam, Farwell fine sandy loam, Farwell sandy loam, Madera loam, Chino silty clay loam and Chino clay loam, shallow phase. The Honcut, Greenfield and Farwell series are deep, medium textured soils, with few if any limitations.

The Exeter, San Joaquin and Madera loams have relatively shallow hardpans, typically 2 to 3 feet beneath loam and clay loam soils. The permeabilities and rooting depths of these soils are considerably improved by ripping and shattering the hardpans, due to the sandy soils beneath.

The soils of the Chino series have heavier textures, dominated by clay loams. Soils of the shallow phase grow increasingly alkaline with depth and have hardpans at 3 to 5 feet.

Class 2 soils are largely concentrated in the northern third of the District and in the southern third. In the north end of the District, the predominant Class 2 soils are: Honcut sandy loam, Exeter loam, Farwell sandy loam and Madera loam. Hardpans are common throughout these northern Class 2 areas, at depths of 3 to 4 feet.

Hardpans are less common in the southern end of the District. The prevalent Class 2 soils there are: Exeter loam, San Joaquin loam, Wyman loam, Porterville clay, Farwell fine sandy loam, Chino clay loam and silty clay loam. All but the San Joaquin and Exeter loams are free of hardpans within 5 feet of the surface.

The Wyman soils are medium textured, with loam overlying strata of clay loam, loam and sandy clay loam. Slopes vary from 0 to 5 percent. The Porterville clays are situated on slopes that range from 0 to 9 percent. They are deep soils, clay and sandy clay, to a depth of at least 6 feet.

Class 3 is the predominant land class throughout the middle third of the District. Across the northern third of the district small areas of Class 3 are widely interspersed among the Classes 1 and 2. Broader expanses of Class 3 are situated throughout the southern third, though Class 2 prevails there.

The major Class 3 soils are Greenfield sandy loam, shallow phase, Exeter loam, San Joaquin loam, sandy loam and Farwell fine sandy loam. Hardpans are found throughout those Class 3 soils at depths ranging from 1 foot to 3½ feet.

Class S3 was assigned to 25 acres at the base of Lewis Hill, in the southeastern corner of the District. The soil is deep Porterville clay. Slopes are around 15 percent.

Class 6 lands are located in eight widely scattered areas, totaling 194 acres. Class 6 was assigned to areas unsuited to irrigated agriculture, such as natural drainageways, urban areas and slopes as steep as 30 percent.

SOIL DESCRIPTIONS

The 1940 and 1982 Soil Conservation Service, (SCS), soil surveys identify the two (2) most common soil series in the District as Exeter loam and San Joaquin loam. The Exeter loam predominates throughout the District north of Strathmore. Smaller areas of Honcut sandy loam and Greenfield sandy loam are found south and southwest of Lindsay. In the northwest and western extremes of the District, the Madera loam is the most common soil series. Across the southeastern quarter of the District, around Strathmore, the San Joaquin loam is the major soil series. Within that same southeastern area, lesser areas of Wyman loam and Porterville clay are intermixed. In the southwestern end of the District are significant areas of Chino clay loam, including the shallow phase and Chino silty clay loam. The general soil descriptions, from SCS soil surveys: Visalia Area, December, 1940 and Tulare County, California, Central Part, February, 1982, are listed below:

Exeter Series: The Exeter loam is a well-drained soil, moderately deep to a duripan. Exeter soils formed in alluvium, mainly from granitic sources on terraces. Slope ranges from 0 to 2 percent. A typical profile is 14 inches of brown and dark yellow brown loam over 16 inches of brown loam, reddish brown sandy clay loam and yellowish red clay loam. A hardpan, around 13 inches thick, lies beneath. Below the hardpan, to at least 60 inches, are sand and gravelly coarse sand. Ripping and shattering the hardpan can improve the permeability and rooting depth. The soil is suited to vineyards, orchards and cultivated crops.

San Joaquin loam: The San Joaquin loam is a well-drained hardpan soil formed on terraces, from granitic alluvium. Most areas of this soil in the District are nearly level. The top 13 inches

are brown to reddish brown loam, above 12 inches of reddish brown clay and sandy clay loam. Hardpan, typically 31 inches thick, lies beneath. Below the hardpan are strata of loam and sandy loam to 78 inches. Ripping and shattering the hardpan can improve the permeability and rooting depth. This soil is suited to vineyards, orchards and cultivated crops.

Honcut sandy loam: Honcut sandy loam is deep and well drained. It is situated on alluvial fans, having developed from granitic sources. Slopes are 0 to 2 percent. The surface, to 11 inches is brown sandy loam. Pale brown sandy loam lies beneath to a depth of 70 inches. This soil is suited to orchards and vineyards, the moderate available water holding capacity being the main limitation.

Greenfield sandy loam: This soil is very deep, well drained and nearly level. It formed in alluvial fans from granitic sources. The top 10 inches are brown sandy loam. The subsoil is dark yellowish brown and brown sandy loam, to about 49 inches. Below, to 70 inches, is brown sandy loam. It is well suited to orchards and vineyards, with few limitations.

Madera loam: The Madera loam is a hardpan soil, occupying smooth alluvial terraces. The top 10 to 18 inches are brown loam. Brown, dark brown, or dark grayish brown clay lies beneath, atop a hardpan commonly found around a depth of 3 feet. The hardpan is typically 6 to 10 inches thick. Below the hardpan is light brownish gray, slightly calcareous sandy loam. Ripping and shattering the hardpan can improve the available rooting depth.

Wyman loam: This very deep soil is well drained, on gently sloping alluvial fans. It formed in mixed alluvium derived mainly from gabbro and mica schist. Typically, the surface layer is brown loam about 19 inches thick. The subsoil is brown loam, clay loam and sandy clay loam, about 50 inches thick. Yellowish brown sand extends below the subsoil to a depth of 75 inches. This soil is well suited to orchards and cultivated crops, with few limitations.

Porterville clay: This very deep soil is well drained, on gently to moderately sloping alluvial fans with slopes of 2 to 9 percent. It formed in alluvium derived from weathered basic igneous rock. Typically, the surface layer is brown and dark reddish brown clay, about 32 inches thick. The underlying material is dark reddish gray clay and sandy clay to a depth of about 72 inches. The soil is calcareous below a depth of about 32 inches. Deep, wide cracks form in this soil when it is dry. This soil is suited to orchards. Erosion hazard and the clay textures are the main limitations.

Chino clay loam: The surface of this deep soil is gray clay loam, generally not calcareous. Below a depth of 14 to 20 inches, the subsoil is light brownish gray clay loam, with high concentrations of lime. This material grades into a lighter textured material, in which the lime is

more evenly distributed. The substratum consists of light brown or brown mottled variably textured alluvial sediments. This soil is suited to cultivated crops. Its low lying position and resultant frost danger discourage attempts at orchard crops. The heavy textures require care in cultivation.

Chino clay loam, shallow phase: The surface of this soil is dark gray loam or silty clay loam, to depths of 10 to 20 inches. Brownish gray clay loam lies beneath, at 3 to 5 feet, atop a hardpan. It is suited to cultivated crops, though heavy textures require care in cultivation to avoid compaction.

Chino silty clay loam: Chino silty clay loam developed on granitic alluvial fans or flood plains under restricted drainage. The soil surface is gray calcareous loam. From 15 to 24 inches, the subsoil consists of gray, slightly to moderately compact clay loam, or silty clay loam, with lime nodules and seams. At about 30 inches the subsoil is pale yellowish gray, highly calcareous silty clay loam, or silt loam. This layer grades into a light grayish brown, permeable fine sandy loam, or sandy loam. This soil is suited to cultivated crops. Heavy textures require care in cultivation.

3. Agricultural limitations resulting from soil problems (Agricultural only)

Soil Problem	*Estimated Acres*	*Effect on Water Operations and Management*
Salinity	None	
High-water table	None	
High or low infiltration rates	None	
Other (define)	None	

D. Climate

1. General climate of the district service area

The climate of the District is typical of the San Joaquin Valley, being semiarid and characterized by mild winters and hot, dry summers. Summer daytime temperatures frequently exceed 100 degrees Fahrenheit while winter temperatures drop below 32 degrees Fahrenheit. The mean annual temperature at nearby Porterville is 61.1 degrees Fahrenheit. The average annual minimum and maximum temperatures are 46.9 and 75.9 degrees, respectively.

The average yearly rainfall for the District area is 6.95 inches, based on records established by the California Irrigation Management Information System (CIMIS) Station number 169 at Porterville. Rain falls principally during the period December to April.

The entire District is thermally protected by drainage of cold air from the higher elevations to the valley floor. The topography is generally rolling, with warmer temperatures on the slopes

and colder spots in the swales and drainage channels. The eastern portion of the District is generally warmer than the western or lower area where the land is less rolling.

The climatological normals for the District area presented in the preceding tables were obtained from the CIMIS station number 169 at Porterville, for the 9-year period of 2001-2009, inclusive. The climatological extremes for the District area were obtained from the CIMIS station number 169 at Porterville, for the period of 2001-2009, inclusive.

	Jan	*Feb*	*Mar*	*Apr*	*May*	*Jun*	*Jul*	*Aug*	*Sep*	*Oct*	*Nov*	*Dec*	*Annual*
Avg Precip.	1.02	11.3	0.82	0.70	0.23	0.06	0.02	0.00	0.07	0.28	0.75	1.87	6.95
Avg Temp.	43.6	48.5	54.9	59.3	67.0	74.8	79.6	77.9	73.0	61.9	51.4	43.5	61.4
Max. Temp.	56.1	61.5	69.1	74.2	83.0	91.4	95.9	94.9	90.5	78.7	66.0	55.7	76.4
Min. Temp	33.0	36.7	40.8	43.8	50.4	57.4	63.2	61.4	57.0	47.3	39.2	33.2	47.0
ETo	1.36	1.97	3.84	5.07	6.90	7.86	8.03	7.32	5.36	3.46	1.88	1.17	4.52

Weather station ID CIMIS #169 *Data period: Year* 2007 *to Year* 2015*
Average wind velocity 3.1 mph *Average annual frost-free days:* 263

* Estimated September 2015 – December 2015 (average of prior years for each month)

2. *Impact of microclimates on water management within the service area*

Demand exists for water during the winter months for frost protection purposes. This demand is independent of the evapotranspiration demand.

E. Natural and Cultural Resources

1. *Natural resource areas within the service area*

Name	*Estimated Acres*	*Description*
None	None	Not Applicable

2. *Description of district management of these resources in the past or present*

Not Applicable – no applicable resources exist within the District boundaries.

3. *Recreational and/or cultural resources areas within the service area*

Name	*Estimated Acres*	*Description*
None	None	Not Applicable

F. Operating Rules and Regulations

1. Operating rules and regulations

See **Attachment C**, District Rules and Regulations (water related).

2. Water allocation policy (Agricultural only)

The District's agricultural water allocation policy is as follows: At the beginning of each irrigation season, all water allocated to the District by Reclamation shall be pro-rated to each acre of land within the District equally according to the latest Assessed Valuation of the land. (Article 2. Section 22250, Water Code of the State of California.) The District Board of Directors policy exception exists which states: "no water shall be apportioned to parcels of five acres or less, unless a specific request is made by the landowner." But continues that a "...standby charge will remain on those parcels that requested pro-rate". Therefore, once a landowner requests the land to receive an allocation, the land will be placed in the District's assessment lands and be assessed annually the Stand-by charge and will receive an allocation in perpetuity.

3. Official and actual lead times necessary for water orders and shut-off (Agricultural only)

The policies of the District indicate that orders for turn-on shall be made not later than 9:00 a.m. at the District office, or telephoned to the office, on the morning of the day before the delivery of water is requested. Orders will be accepted at any time during the day, for delivery at a time later than the following day. No changes in water delivery, except for emergencies, will be made on Sunday. Orders for turn-off are the same as for a turn-on. Except for unusual circumstances, a turn-off order request will not be allowed the same day.

4. Policies regarding return flows (surface and subsurface drainage from farms) and outflow (Agricultural only)

Surface drainage from irrigation operations are considered as a waste of water. Storm-water runoff is controlled by the Regional Water Quality Control Board and District landowners are participating members of the Kaweah Sub-watershed or the Tule Sub-watershed of the Southern San Joaquin Water Quality Coalition. There is no known subsurface drainage issue requiring a policy.

5. Policies on water transfers by the district and its customers

The District has adopted water transfer policies which allow for water transfers. According to these policies, water may be transferred from one parcel of land to another and from one

landowner to another, within the District. Water transfers to and from the District are subject to Reclamation's Friant Division Water Operations Policy. Landowner/grower transfers are allowed into the District, but not from the District.

G. Water Measurement, Pricing, and Billing

1. Agricultural Customers

a. Number of farms 998

b. Number of delivery points (turnouts and connections) 1,215

c. Number of delivery points serving more than one farm 0

d. Number of measured delivery points (meters and measurement devices) 1,207

e. Percentage of delivered water that was measured at a delivery point 100

f. Delivery point measurement device table (Agricultural only)

Measurement Type	*Number*	*Accuracy (+/- %)*	*Reading Frequency (Days)*	*Calibration Frequency (Months)*	*Maintenance Frequency (Months)*
Orifices					
Propeller meter	1,176	±5%	After each turn-off	12[1]	12
Magnetic Meter	31	±3%	After each turn-off	12[1]	12
Flumes					
Venturi					
Metered gates					
Acoustic doppler					
Other (define)					
Total					

[1]200 meters calibrated per year.

2. Urban Customers

This section was intentionally left blank because the District does not have urban customers.

a. *Total number of connections* _____

b. Total number of metered connections _____

c. Total number of connections not billed by quantity _____

d. Percentage of water that was measured at delivery point _____

e. Percentage of delivered water that was billed by quantity _____

f. Measurement device table

Meter Size and Type	*Number*	*Accuracy (+/-percentage)*	*Reading Frequency (Days)*	*Calibration Frequency (Months)*	*Maintenance Frequency (Months)*
5/8-3/4"					
1"					
1 ½"					
2"					
3"					
4"					
6"					
8"					
10"					
Compound					
Turbo					
Other (define)					
Total					

3. Agriculture and Urban Customers

a. Current year agriculture and /or urban water charges - including rate structures and billing frequency

The current-year water rate is $60.00 per acre foot. Billing frequency is monthly. In 2014 the District did not receive a Federal Contract Supply. As a result The District purchased 2,059 acre feet from the Exchange Contractor Supply from Millerton. This set rate was abandoned and a subscription rate was set. Growers had to request a specified quantity they would purchase at $825 acre foot.

b. Annual charges collected from customers (2014 water year data)

Fixed Charges: All landowners are assessed a "fixed land based" charge. This fee is typically considered a revenue source to cover the cost of financing the distribution system. It is called a "Stand-by" charge and is charged regardless of any water delivered to any grower.

Volumetric Charges: All growers receiving water from the District are charged for the volume of water delivered to them through their meter and such revenues typically are used to cover the cost of the water and associated delivery and administrative costs.

Fixed Charges			
Charges ($ unit)	*Charge units ($/acre), ($/customer) etc.*	*Units billed during year (acres, customer) etc.*	*$ collected ($ times units)*
$25.00	$/Acre	25,540 Acres	$638,500

Volumetric charges[1]

Charges ($ unit)	*Charge units ($/AF), ($/HCF), etc.*	*Units billed during year (AF, HCF) etc.*	*$ collected ($ times units)*
$825.00	$/Acre Foot	2,059[(2)]	$1,699,088

*[(1)]See **Attachment D**, District Sample Bill*
[(2)]Generally the District partially fills the system utilizing groundwater. This is done in order to use the warmer temperature conditions of ground water. These lower temperature reduce pipe and joint cracking and leakage that would occur with colder surface water supplies. The pumped volume is such that the sum of the metered deliveries is close to the gross surface water introduced. The volume lost due to leakage therefore closely responds to the volume pumped. The District assumes the water necessary to fill the system (including the pump-in) in its total volume of losses.

c. Water-use data accounting procedures

Water meters are read at each turn-off event. They are summarized and billed to each water user on a monthly basis. Any discrepancy must be addressed with the District prior to the 25th day of the month following billing. Use records are computerized and are maintained in the office of the District. All meters are then read after the final delivery of District water (usually December of each year) and compared to the last prior reading. Any unrecorded use of water is then recorded and billed.

H. Water Shortage Allocation Policies

1. Current year water shortage policies or shortage response plan - specifying how reduced water supplies are allocated

Any water shortage declaration by Reclamation is treated the same way as the annual allocation; that is, each year's allotment is pro-rated out to the District growers. The District will equally, to each acre of assessed land, allocate the total supply available. In any short water year, growers can make up the difference with private wells or purchase water from the District Pool, which is water returned to the District by growers not needing their full allotment in the current year. In years where there is no allocation (Water Years 2014 and 2015), the District will search for water available from any source and sell it to its growers by subscription.

2. Current year policies that address wasteful use of water and enforcement methods

The District's available surface water supply is below the consumptive demand of the crops grown, even in normal years. Wet year water supplies are also allocated equally to all lands. Any water found to be wasted, such as field runoff to roadways, broken ditch banks, clogged siphon or

sprinkler pipes, is reported to the responsible farm operator and is taken care of immediately. No enforcement policy has ever had to be put in place to address this situation. The power to generate specific enforcement regulations is contained in Number 21 of the District's Rules and Regulations. That document is contained herein in **Attachment C**. This document is continuously reviewed by the Board of Directors and is amended and approved entirely as needed. It is transmitted to each landowner on an annual basis prior to the delivery of water.

I. Evaluate Policies of Regulatory Agencies Affecting the Contractor and Identify Policies that Inhibit Good Water Management

The District's primary deliverable is to transport Federal Contract Water Supplies from the Friant-Kern Canal. This water is made available as an exchange of water from the Sacramento River supply delivered through the Sacramento/San Joaquin Delta and pumped into Delta Mendota Canal or the San Luis Reservoir then delivered to the Exchange Contractors (EC's). The EC's reserved supply is then delivered to the Friant Contractors. Since the State and Federal regulatory agencies have drastically re-operated the Central Valley Projects (especially the supply released from Shasta Dam through the Delta and to the pumps at San Luis Reservoir) for the purpose of maintaining fish in the Delta and meeting "Health and Safety Demands" to cities and potable consumers south of the Delta for both Federal and State water users. However, all of the purposes were inferior to the rights of the EC's supply and the USBR's owned water rights. Because of these actions, and other, the opportunity to supply the EC's with that available surface water supply from the Sacramento River was drastically impacted. When the USBR is able to deliver the agreed to supply to the EC's, the delivery of water generated in the San Joaquin Watershed can then be delivered to Friant Contractors. However, in contract years 2014 and 2015, the USBR was not able to deliver the agreed to supply to the EC's and therefore 100% of the water generated for use amongst the Friant Contractors was sent to the EC's leaving Friant Contractors with no Federal Contract supply. This created tremendous impacts on Federal Water Contractors revenue and groundwater supplies.

It is estimated that if the regulatory agencies had not re-operated the CVP for the purpose of the inferior rights of the environment or health/safety purposes, Lindmore Irrigation District would have received about 17,000 acre feet of allocated supply and would have had the opportunity to purchase another 7,500 to 10,000 acre feet of water total for those two year. However, the District received 0 acre feet. The District used substantial financial resources to purchase a total of

a little over 3,600 acre feet. This water was used as "emergency water" by those growers that could afford the supply (which cost $825 to $1,100 an acre foot, compared to a normal cost of $65 acre foot).

Since much of the District is farmed in permanent plantings, water is required just to maintain the life of the trees which are planted with substantial capital costs. Because the growers need to protect the tree, some water only sufficient to maintain the life of the planting using groundwater. Most however attempted to grow a crop which required more groundwater (in the absence of the surface supply). As a result, the District available groundwater was reduced by at least 27,000 acre feet or approximately 20 feet of groundwater level.

The District does not know of any regulatory requirements impacting good water management practices.

Section 2: Inventory of Water Resources

A. Surface Water Supply

Table 1(a)

Surface Water Supply (2014 Monthly)

Calendar Year 2014 Month	Federal Ag Water (acre-feet)	Federal Non-Ag Water (acre-feet)	State Water (acre-feet)	Local Water (acre-feet)	Other Water (define) (acre-feet)	Upslope Drain Water (acre-feet)	Total (acre-feet)
January	0	0	0	0	0	0	0
February	0	0	0	0	0	0	0
March	0	0	0	0	0	0	0
April	0	0	0	0	0	0	0
May	0	0	0	0	0	0	0
June	0	0	0	0	0	0	0
July	0	0	0	0	76	0	76
August	0	0	0	0	324	0	324
September	0	0	0	0	692	0	692
October	0	0	0	0	967	0	967
November	0	0	0	0	0	0	0
December	0	0	0	0	0	0	0
TOTAL	0	0	0	0	2,059	0	2,059
Average	0	0	0	0	172	0	172

Other Water Delivered: Exchange of Northern California purchased supplies delivered to the Exchange Contractors through San Luis Reservoir in exchange for 2,059 AF of supply in Millerton delivered to Lindmore Irrigation District

Table 1(b)

Surface Water Supply (10 year)

Calendar Year 2014 Month	Federal Ag Water (acre-feet)	Federal Non-Ag Water (acre-feet)	State Water (acre-feet)	Local Water (acre-feet)	Other Water (define) (acre-feet)	Upslope Drain Water (acre-feet)	Total (acre-feet)
2006	41,727	0	0	0	0	0	41,727
2007	20,277	0	0	0	0	0	20,277
2008	33,984	0	0	0	0	0	33,984
2009	31,578	0	0	0	0	0	31,578
2010	41,603	0	0	0	0	0	41,603
2011	39,975	0	0	0	0	0	39,975
2012	24,843	0	0	0	0	0	24,843
2013	28,271	0	0	0	0	0	28,271
2014	-	0	0	0	2,059	0	2,059
2015	-	0	0	0	1,649	0	1,649
TOTAL	262,258	0	0	0	3,708	0	265,966
Average	26,226	0	0	0	371	0	26,597

Other Water Delivered: Exchange of Northern California purchased supplies delivered to the Exchange Contractors through San Luis Reservoir in exchange for like water supply in Millerton and delivered to Lindmore Irrigation District

B. Ground Water Supply

1. Acre-foot amounts of ground water pumped and delivered by the district

Calendar Year 2014 Month	District Ground Water (acre-feet)	Private Ground Water * (acre-feet)
January	-	1,024
February	-	2,113
March	-	1,713
April	-	3,088
May	-	11,270
June	-	13,115
July	-	15,888
August	-	14,950
September	-	4,785
October	-	2,250
November	-	800
December	-	750
Total	-	71,746

** estimated*

2. *Ground water basin(s) that underlies the service area*

Name	*Size (Square Miles)*	*Usable Capacity (AF)*	*Safe Yield (AF/Y)*
DAU 242	Not Available	3,395,000	42,000

The Lindmore Irrigation District lies on the south central and eastern floor of the San Joaquin Valley. It is bounded on the east by the Lindsay Strathmore Irrigation District (LSID) and to the north east by the Sierra Nevada Foothills. The District and LSID form a "groundwater geologic unit" called the Lindsay Cone of Depression (Cone). This unit is bounded on the "north by the Kaweah River and on the south by the Tule River" There are four main physiographic divisions: D1. Foothill (underlain by crystalline rocks of the Basement Complex, D2. Smooth consists of smooth slopes underlain by weathered out wash form the foothills, D3. Old Alluvial from piedmont formed by the Kaweah and Lower Tule rivers, and 4D. Lower lying and young alluvial fans and stream bottoms of the Kaweah and Lower Tule rivers. (Geologic Study of the Lindmore Irrigation District – USBR 1948).

The safe yield number which is presented is a pre-Friant Division computation figure developed by Reclamation. As the contract allocations for the District and for the Lindsay-

Strathmore Irrigation District were based on water quality as well as groundwater depletion issues, the groundwater condition is considerably improved. Reclamation prepared a post contract issuance report to determine if the District contract was of value, which concluded that it was. While groundwater conditions have considerably improved, no definitive work has been done to re-compute the post-contract safe yield.

The groundwater conditions provide the principal basis for the strong water allocation/use policies of the District. The same conditions provide the basis for the annual actions of the District in seeking additional contract supplies of other contractors for transfer and use. Each of these policy actions and/or procedures reflects the position of the District with respect to protection of the underlying groundwater.

3. Map of district-operated wells and managed ground water recharge areas

The District owns and operates three (3) groundwater wells. They are located adjacent to the 88.4 Line (1.80 miles west of the Friant-Kern Canal, the 90.4 Line (0.80 miles west of the Friant-Kern Canal, and the 93.2 West line adjacent to the Friant Kern Canal. These wells sole purpose is to assist in filling the pipelined distribution system by inserting the warmer well water blended with the water that is delivered from the Friant-Kern Canal. This process aids in the prevention of system expansion fracturing. The District has a number of ways to determine the volume produced annually by these wells. The District has an estimate of the total volume required to initially fill the distribution system. The District has installed meters on each well for delivery calculations. From these figures a verification of the amount pumped can be determined. The estimate quantity to fill the system is 73 acre-feet. At the end of the irrigation season, this quantity is vacated from the system by pumping. It is pumped into the District's balancing reservoirs where it percolates back to useable groundwater. The pumped volume is not delivered to any grower(s), is not sold and does not contribute to satisfaction of crop demand. It has been noted as a quantity pumped based on USBR comments, however, it is not included in all the subsequent tables as it is not delivered to any grower(s).

4. Description of conjunctive use of surface and ground water

Conjunctive use was a principal issue when the District's distribution system was designed and constructed by the Bureau. When Friant Division-CVP water is available, water users are encouraged to use it and reduce or stop their groundwater pumping. This is accomplished by adjusting the quantity of water that is allocated to each acre of land each irrigation season. The water users have the option to use the water or transfer its use within the District. Any unused water is billed at the end of the season. As the District's water supply is supplemental, access to a well to extract water from the underground is required. The aquifer underlying the District is recharged by reducing private pumping when supplemental surface waters are available, from precipitation and percolation from the Kaweah River, Tule River, Lewis Creek and Frazier Creek.

The District's policy of requiring payment for water, whether delivered or not, has been a topic of discussion for a long number of years. It has been debated, argued and made the topic of elections over the years. It has, however, survived intact. The principal basis is simple – to insure delivery of every drop of allocated supply into the District. The allocated supply is supplemented with inbound transfers whenever possible. Over time, policy modifications have been put into place to insure equity with respect to fallow lands, lands with new crops planted and growers electing, some for penetration purposes, to utilize some groundwater to meet total demand requirements. Exchanges and transfers between growers are allowed and the general return pool has been in place for a number of years. Each of these provisions allows for the objectives of the District to remain in place without punitive repercussions. The only example where conservation is not optimized is where a grower has a marginal well, does not want to or cannot replace it at that exact time and elects to hold on to the supply in case the well fails. The water is, however, not lost if not used by year-end. It must be paid for, but can be carried over, transferred or exchanged into a subsequent year. Conservation objectives can still be achieved.

5. Ground Water Management Plan

The District is currently is currently participating with Kaweah Delta Water Conservation District (KDWCD) as a plan participant in KDWCD's Groundwater Management Plan, which was last updated in 2007 and is SB 1938 compliant. Attachment G provides a link to the Kaweah-Delta Water Conservation District's Groundwater Management Plan which will act as a placeholder for the District. However, it must also be noted that the State of California's new groundwater legislation (Sustainable Groundwater Management Act) has changed this issue significantly. The Lindmore Irrigation District is wholly within the Kaweah Sub-Basin. It is currently considering forming a Groundwater Sustainability Agency (GSA) that is not part of the KDWCD's plan and will be associated with other eastern Kaweah Sub-Basin entities. For the

purpose of this five year update, we submit the KDWCD's plan but reserve the right to adopt something different but one that will be compliant

6. *Ground Water Banking Plan*

The District does not currently have a groundwater banking plan.

C. Other Water Supplies

1. *"Other" water used as part of the water supply*

The District typically only delivers Federal Ag Water, as listed in Table 1 of Section 5. However, due to the drought and adverse federal/state regulatory decisions, the District purchased supplies from the Exchange Contractor Fallowing program and Westlands transfer in water program. All other water used in the District is delivered by landowners through privately owned groundwater wells.

D. Source Water Quality Monitoring Practices

1. *Potable Water Quality (Urban only)*

Not Applicable – the District does not provide urban water.

2. *Agricultural water quality concerns*: *Yes* _____ *No* ___✓___
(If yes, describe)

3. *Description of the agricultural water quality testing program and the role of each participant, including the district, in the program*

Individual landowners are signatory to the Kaweah Sub-watershed or the Tule Sub-watershed of the Southern San Joaquin Valley Water Quality Coalition. The District is not a signatory to either entity nor does it participate in the entities in any way. Water quality is not in the purview of the District. Individual growers report to and receive reports from those two entities with regard to water quality monitoring and practices.

4. *Current water quality monitoring programs for surface water by source (Agricultural only)*

General

For major portions of the last five (5) years, two (2) separate water quality monitoring programs were in place. Each of these programs has developed a history of water quality sampling events and test results and one is still conducted by specific water contractors. As each of the

conducting entities are public agencies, the developed information is a part of the public domain and is thus available to each of the contractors diverting water from the Friant-Kern Canal. While these programs are principally designed to address domestic water quality program issues, the generated data covers all of the constituents of concern related to agricultural uses. The program is as follows:

DHS Program

The Department of Health Services (DHS) has approved a monitoring program specific to four (4) permitted water systems diverting raw water from the Friant-Kern Canal. DHS approved the program for specific domestic suppliers covered by the approval action. A Certificate of Analysis indicating the constituents which are tested, the test methods and the minimum detection levels associated with the testing process is available upon request. The testing frequency is designed to assure compliance with state and federal drinking water quality programs and thus is more than sufficient to insure an adequate testing frequency for agricultural concerns.

E. Water Uses within the District

1. Agricultural

2014 Crop Name	Area (crop acres)	Crop ET (AF/Ac)	Leaching Requirement (AF/Ac)	Cultural Practices (AF/Ac)	Effective Precipitation (AF/Ac)	Appl. Crop Water Use (Acre-Feet)
Alfalfa	1,418	5.00	0.200	-	0.40	6,806
Almonds	675	2.80	0.022	-	0.40	1,635
Apples	55	3.70	0.023	-	0.40	183
Avocados	11	3.70	0.023	-	0.40	37
Berries	40	1.90	0.012	-	0.20	68
Cherries	157	3.70	0.023	-	0.40	522
Corn (Silage)	1,197	3.40	0.012	-	0.20	3,845
Corn; sweet	314	3.40	0.012	-	0.20	1,009
Cotton (Upland)	209	3.90	0.005	-	0.10	795
Kiwis	57	3.80	0.020	-	0.20	206
Grapefruit	50	2.90	0.100	0.30	0.20	155
Grapes, table	1,554	3.80	0.020	-	0.20	5,625
Lemons and Limes	40	2.90	0.100	0.30	0.20	124
Persimmions	33	3.70	0.023	-	0.30	113
Olives	3,736	2.80	0.100	-	0.30	9,714
Oranges, Tangerines	11,996	2.90	0.100	0.30	0.20	37,188
Peaches	166	3.70	0.023	-	0.40	552
Pecans	57	2.80	0.022	-	0.40	138
Plums	515	3.70	0.023	-	0.40	1,711
Prunes	70	3.70	0.023	-	0.40	233
Pomegranates	242	3.70	0.023	-	0.40	804
Total Nursery	32	1.90	0.120	-	0.20	58
Walnuts	680	2.80	0.022	-	0.40	1,647
Misc. Crops	41	2.80	0.012	-	0.20	107
Crop Acres	**23,345**					**73,274**

2. *Types of irrigation systems used for each crop in current year*

Crop name	*Total Acres*	*Level Basin - acres*	*Furrow – acres (inc. flood)*	*Sprinkler - acres*	*Low Volume - acres*	*Multiple methods - acres*
Alfalfa	1,418		1,418			
Almonds	675				675	
Apples	55				55	
Avocados	11				11	
Berries	40				40	
Cherries	157				157	
Corn (Silage)	1,197		1,197			
Corn, sweet	314		314			
Cotton (Upland)	209		209			
Kiwis	57				57	
Grapefruit	50				50	
Grapes, table	1,554		1,554			
Lemons and Limes	40				40	
Persimmons	33				33	
Olives	3,736				3,736	
Oranges, Tangerines	11,996		825		11,171	
Peaches	166		122		44	
Pecans	56				56	
Plums	515		195		320	
Prunes	70		70			
Pomegranates	242				242	
Total Nursery	32				32	
Walnuts	680		680			
Misc. Crops	41					41

3. *Urban use by customer type in current year*: N/A

4. *Urban Wastewater Collect/Treatment Systems serving the service area – current year:* **N/A**

5. *Ground water recharge/management in current year (Table 6):* **None**

6. *Transfers and exchanges into or out of the service area in current year (Table 6:* **None**

7. *Trades, wheeling, wet/dry year exchanges, banking or other transactions in current year (Table 6):* **None**

8. *Other uses of water in current year*

Pumped groundwater to fill system. System emptied to basins and returns to groundwater reservoir at end of season.

F. Outflow from the District (Agricultural only)

Districts included in the drainage problem area, as identified in "A Management Plan for Agricultural Subsurface Drainage and Related Problems on the Westside San Joaquin Valley (September 1990)," should also complete Water Inventory Table 7 and Appendix B (include in plan as Attachment L)

See Facilities Map, **Attachment A**, for the location of surface and subsurface outflow points, outflow measurement points, outflow water-quality testing locations

1. *Surface and subsurface drain/outflow in current year*
   There are no surface outflow points from the District.

2. *Description of the Outflow (surface and subsurface) water quality testing program and the role of each participant in the program*
   Not Applicable – there is no outflow.

3. *Outflow (surface drainage & spill) Quality Testing Program*
   Not Applicable – there is no outflow.

   Outflow (subsurface drainage) Quality Testing Program
   Not Applicable – there is no outflow.

4. *Provide a brief discussion of the District's involvement in Central Valley Regional Water Quality Control Board programs or requirements for remediating or monitoring any contaminants that would significantly degrade water quality in the receiving surface waters.*
   Individual landowners are signatory to the Kaweah Sub-watershed or the Tule Sub-watershed of the Southern San Joaquin Valley Water Quality Coalition.

G. Water Accounting (Inventory)

1. *Water Supplies Quantified*

   a. *Surface water supplies, imported and originating within the service area, by month*
      See Section 5, Table 1(a).

   b. *Ground water extracted by the district, by month*
      See Section 5, Table 2.

   c. *Effective precipitation by crop (Table 5)*
      See Section 5, Table 5.

   d. *Estimated annual ground water extracted by non-district parties (Table 2)*
      See Section 5, Table 2.

   e. *Recycled urban wastewater, by month (Table 3)*
      See Section 5, Table 3.

f. Other supplies, by month (Table 1)
See Section 5, Table 1.

2. *Water Used Quantified*

a. Agricultural conveyance losses, including seepage, evaporation, and operational spills in canal systems (Table 4) or Urban leaks, breaks and flushing/fire uses in piped systems
See Section 5, Table 4.

b. Consumptive use by riparian vegetation or environmental use (Table 6)
See Section 5, Table 6.

c. Applied irrigation water - crop ET, water used for leaching/cultural practices (e.g., frost protection, soil reclamation, etc.) (Table 5)
See Section 5, Table 5.

d. Urban water use (Table 6)
See Section 5, Table 6.

e. Ground water recharge (Table 6)
See Section 5, Table 6.

f. Water exchanges and transfers and out-of-district banking (Table 6)
See Section 5, Table 6.

g. Estimated deep percolation within the service area (Table 6)
See Section 5, Table 6.

h. Flows to perched water table or saline sink (Table 7)
See Section 5, Table 7.

i. Outflow water leaving the district (Table 6)
See Section 5, Table 6.

j. Other
None.

3. *Overall Water Inventory*
See Section 5, Table 6.

H. Assess Quantifiable Objectives:

Identify the Quantifiable Objectives that apply to the District (Planner, chapter 10) and provide a short narrative describing past, present and future plans that address the CALFED Water Use Efficiency Program goals identified for the District.

The District has been identified as having lands within its boundary that are subject to quantifiable objectives. The identified quantifiable objectives address providing improved long-term diversion flexibility to increase the water supply for beneficial uses and to decrease flows to salt sinks to increase the water supply for beneficial uses.

In addition to importing surface water for irrigation and groundwater recharge purposes, District growers have improved on-farm irrigation systems to the extent that in excess of 63 percent of these systems are permanent, low volume systems. This has resulted in reduced losses to the soil mantle outside of the root zone. Resultant water savings have first been dedicated to improving crop yields with the periodic residual being the negotiating tool to allow the District to deal with reduced water supplies resulting from settlement of the San Joaquin River litigation and diversion reductions from the Sacramento-San Joaquin Rivers delta.

Section 3: Best Management Practices (BMPs) for Agricultural Contractors

A. Critical Agricultural BMPs

1. *Measure the volume of water delivered by the district to each turnout with devices that are operated and maintained to a reasonable degree of accuracy, under most conditions, to +/- 6%*

Number of turnouts that are unmeasured or do not meet the standards listed above: 0

Number of measurement devices installed last year: 8, & about 130 repaired or replaced

Number of measurement devices installed this year: 2, & about 103 repaired or replaced

Number of measurement devices to be installed next year: 2, & about 120 repaired or replaced

Types of Measurement Devices Being Installed	*Accuracy*	*Total Installed During Current Year*
Magnetic Meters (New connection)	±3%	1
Magnetic Meters (replacing vertical flow prop meters)	±3%	11

2. *Designate a water conservation coordinator to develop and implement the Plan and develop progress reports*

Name: Michael D. Hagman *Title:* General Manager

Address: 315 E. Lindmore Avenue / P.O. Box 908 Lindsay, CA 93247

Telephone: (559) 562-2534 *E-mail:* mhagman@lindmoreid.com

3. Provide or support the availability of water management services to water users

See **Attachment J**, Notices of District Education Programs and Services Available to Customers.

The District supports the use of Mobile Labs by its growers to evaluate the irrigation practices of all users. This service is provided by several Mobile Labs in the San Joaquin Valley. Growers are responsible for contacting these labs for assistance. Although the District will assist in this effort, the final choice is up to the respective farm units. Growers receive a *Water Supply Outlook* report from the District each March. The report tabs include links to the Mobile Labs in the area and reiterates the District support for the program.

a. On-Farm Evaluations

1) On farm irrigation and drainage system evaluations using a mobile lab type assessment

Note: Notwithstanding how notice of availability of farm evaluation services have been in the past, the newly minted conservation bulletin will contain specific details regarding the program purposes, elements and participation specifics.

	Total in district	*# surveyed last year*	*# surveyed in current year*	*# projected for next year*	*# projected 2nd yr in future*
Irrigated acres	23,345	0	0	2,200	2,200
Number of farms	998	0	0	50	50

2) Timely field and crop-specific water delivery information to the water user

Crop irrigation totals and field water use can be determined by the growers from data reported on their monthly water billing. Individual water events are recorded by on and off dates, with total water delivered summarized on the statements. Growers may inquire at the District office at any time if they want to know flows or delivery amounts to a specific turnout. Ditchtenders have this information with them on the canals each day and may also be asked specific water delivery questions. Since turnouts may deliver to multiple fields, it is the grower's responsibility to notify the Ditch tenders when a switch occurs. If this information is accurate, then statements can reflect accurate delivery amounts.

In addition, to the District supplied data noted above, each week, the Friant Water Authority issues a reproduction of crop coefficients (Attachment J page 1) to all of its contractors which are compiled by the Kings River Conservation District and made available by the District to its growers. Because of the real time frequency of this information, the District directs its growers (via the annual allocation letter) to the Friant Water Authority website to find this information. The table lists the daily average for the previous seven (7) days and estimate of the average for the subsequent seven (7) days of crop coefficients. District water delivery information is provided to each water user, each month in which delivery to a water user is made. This information can then be used by a water user to manage water used by field and crop.

b. Real-time and normal irrigation scheduling and crop ET information

See **Attachment J**, Notices of District Education Programs and Services Available to Customers.

Each week, the Friant Water Authority issues a reproduction of crop coefficients and CIMIS evapotranspiration rates to all of its contractors (Attachment J page 1) which are compiled by the Kings River Conservation District and made available by the District to its growers. The crop coefficients table lists the daily, average for the previous seven (7) days and an estimate of the average for the subsequent seven (7) days, while the CIMIS evapotranspiration rates table lists data for twelve (12) CIMIS stations located within the Friant Division, CVP service area and details daily, total for the previous seven (7) days, normal previous seven (7) days, variance percentage from normal and normal next seven (7) days, evapotranspiration rates.

Most normal year information pertaining to irrigation scheduling and crop evapotranspiration (ET), such as CIMIS data and crop coefficients, is available to the landowner/grower through many agencies or services. The following are examples of services and information that are available to growers:

- The office of Water Use Efficiency (OWUE), through the Department of Water Resources (DWR) provides CIMIS data free of charge to the public for the use in estimating crop water use for irrigation scheduling. This information can be found through the OWUE's CIMIS website at www.cimis.water.ca.gov;
- During the growing season, crop ET information is published in the local newspapers and broadcast daily over the radio for reference and use by any water user;
- The U.S. Weather Service currently provides real-time CIMIS ET data and forecasts on their local weather channels and on the NOAA website.

The examples listed above provide crop specific ET data that is based on real-time. In an effort to assist District landowners in the understanding of crop coefficient and evapotranspiration

rates, and how to develop water use for a specific crop, calculated examples will be published within the on-farm water conservation tools and strategies found in the Water Conservation Information Bulletins, as described in Section 3.3.d. of this report.

c. Surface, ground, and drainage water quantity and quality data provided to water users

All of the acreage within the District is enrolled as participating in the Tule Sub-watershed and/or the Kaweah Sub-watershed of the Southern San Joaquin Water Quality Coalition. The Deer Creek and Tule River Authority (TBWQC.com) and the Kaweah Delta Water Conservation District (kaweahbasin.org) are the lead agencies for said sub-watersheds and each publish periodic newsletters dealing with current Irrigated Lands Regulatory Program issues, current water quality issues and responses and upcoming activities. The Southern San Joaquin Water Quality Coalition maintains a website which contains links to all submitted data, prepared reports and documents and links to state maintained water quality databases such as SWAMP. All of these sites are designed to be user friendly.

d. Agricultural water management educational programs and materials for farmers, staff, and the public

Program	*Co-Funders (If Any)*	*Yearly Targets*
USDA Alternative Farming Systems Information Center		Monthly Billing Notifications
Department of Water Resources (State of California)		
Water Education Foundation		
Friant Water Authority	Friant Division Contractors	Monthly Publications

See **Attachment J** pages for samples of materials and notices provided.

For several years the District has depended on its consulting engineering firm to deliver quarterly water conservation bulletins. However, we are stopping this relationship by June 30, 2016. Instead the District will be informing its growers about water conservation via the many resources available each month on the internet through government and private entities. Attached (Attachment J) is an example of one site (and example of conservation tools/educational materials) the District will be directing its growers to. This information will be accessible by a page established on the District's website (www.lindmoreid.com) titled "Conservation Education". In addition, the District's billing program will be adding a grower communication line in its bills that are sent out each month. See **Attachment J**, Notices of District Education Programs and Services

Available to Customers, for the sample information that will be added or linked on the new Web Page.

e. Other

None – no other information is currently provided.

4. Pricing structure - based at least in part on quantity delivered
Describe the quantity-based water pricing structure, the cost per acre-foot, and when it became effective.

The District has a water pricing policy which reflects the cost of providing water service to the landowner. The water bill which the landowner/grower receives reflects metered usage, date service started, the date service stopped and the quantity delivered in acre-feet. A sample of the District's billing form is attached (Attachment D page 1). The District also bills annually for its assessment. This is set at $25.00 for each acre owned by a grower. A sample of the billing form is attached (Attachment D page 2)

In order to optimize the use of available supplies, the District establishes a common return pool each year. Landowners who are not able to, or desire not to use all of their water entitlement are able, by a defined cut-off date, to return supply to the pool for use by others. This return provision provides the incentive that, if release of the available supply occurs, the grower is relieved of the economic related costs of the retention of the supply. However, if the District is not able to fully transact that supply, the participants of the pool will be returned a pro-rated share of the remaining supply which they will be required to use or pay for anyhow. Since the District's main responsibility is to provide this supplemental source of water (for the purpose of protecting the groundwater basis), the District desires to see that the available contract supply is delivered each year. The District Board of Directors is of the opinion that sufficient relief mechanisms are in place to provide transfer and economic relief to any grower who, for whatever reason(s), opts not to schedule delivery of his/her entitlement during any given year.

5. Evaluate and improve efficiencies of district pumps
Describe the program to evaluate and improve the efficiencies of the contractor's pumps.

In late 2010, the District began upgrading its pumping facility. Of the eight pumps and motors at the pumping facility, the District has replaced four motors and four pumps with current technologies and control devices. It has experienced substantial power savings since its install. In addition, the District is now able to control supply at demand level and minimizes our need to hold

water in mitigating reservoirs. Our current maintenance agreement on the pumping facility is with an electrical engineering firm in Bakersfield, California. They measure the efficiency curve and set the pumping parameters around that curve to achieve maximum efficiency on each line.

B. Exemptible BMPs for Agricultural Contractors

(See Planner, Chapter 2, Appendix C for examples of exemptible conditions)

1. *Facilitate alternative land use*

Drainage Characteristic	*Acreage*	*Potential Alternate Uses*
High water table (<5 feet)	0	Not Applicable
Poor drainage	0	Not Applicable
Ground water Selenium concentration > 50 ppb	0	Not Applicable
Poor productivity	0	Class 6 Lands are not eligible for water service

2. *Facilitate use of available recycled urban wastewater that otherwise would not be used beneficially, meets all health and safety criteria, and does not cause harm to crops or soils.*

Sources of Recycled Urban Waste Water	*AF/Y Available*	*AF/Y Currently Used in District*
City of Lindsay	896	Unknown[1]
Strathmore Public Utility District	224	

[1]The majority of the water is recycled outside of the District boundary.

The basis exists for the District to be exempted from this BMP. Operations of and discharges from the wastewater treatment and disposal facilities of the City of Lindsay and the Strathmore Public Utility District are subject to compliance with orders adopted by the Regional Water Quality Control Board, Central Valley Region (RWQCB), an agency under the control of the California Environmental Protection Agency. These orders are specifically designed to insure that the discharges of treated effluent from and the management of biosolids generated by these facilities meet all applicable federal and state health and safety criteria. In addition, the adopted orders require applications of effluent and biosolids to crops and soils to be consistent with the demands. In order to insure compliance, each order contains specific monitoring and reporting requirements, including a monitor well network. Said network exists to insure that the leaching fraction from effluent applications and percolation from operational and storage facilities do not lead to degradation of the area's resources and interfere with subsequent beneficial uses of available resources. Results of the required monitoring programs are available to any interested party from the State's GAMA and SWAMP databases. This information is in the public domain.

When the RWQCB promulgates a new order, or proposes a change to an existing order, the District has the capability to respond as a Responding Party. The District has the capability, at this juncture in time, to comment on the RWQCB proposal. The District does not, however, have any jurisdictional or police authorities in this regard.

The District is impacted with respect to quantities of treated effluent available for meeting of crop demand. Amounts recycled to growers' lands are in lieu of ordering and delivery of District water. The relationships between the entities which generate treated wastewater and the growers who take possession of this supply for irrigation of their crops are accomplished without action of the District. Availability and use of this supply offsets pumped groundwater as well as District surface water entitlement as the net effect is to allow release of the allocated surface entitlement from the grower accepting effluent to another grower requesting supplemental supply. It should be further noted that the majority of the treated effluent made available for recycling purposes has as its origin, water diverted from the Friant-Kern Canal. Recycled effluent therefore has a net positive effect on available District surface water as well as groundwater conditions.

3. Facilitate Alternative Land Use

The District has no alternative land use programs in place. However, it will be contemplating such as it begins to develop the groundwater management requirements of the State of California's "Groundwater Management Act" also known as SGMA.

4. Facilitate Use of Available Recycled Water that Otherwise Would Not be used Beneficially, Meets all Health and Safety Creiteria, and Does not Cause Harm to Crops or Soil

The District currently has no plans for use of recycled water. However, the District will be considering arrangements with its local communities when it develops its SGMA compliance plans.

5. Facilitate the financing of capital improvements for on-farm irrigation systems

The District maintains a listing of potential funding sources and has an established policy to provide assistance in completing funding application documents. The District is a member of the Farm Service Agency (FSA), formerly known as the Agricultural Stabilization and Conservation Service, which is part of the United States Department of Agriculture. The FSA administers programs concerning on farm conservation and grants loans to farms, through a 50 percent cost-share program for conservation related improvements. The District also financially

participates in on-farm efficiency evaluations. Additional notice is planned for upcoming editions of the informational newsletter.

6. Incentive pricing

The following paragraphs describing incentive pricing are applicable to the pricing policy of the District. While certain conditions may change the price in any given year, the incentive and reasons for price adjustments remain the same from year to year. Rates have been set to encourage use of each grower's District allocation, with the option to return unneeded water to the District for re-allocation to others. This enables each grower to manage his supply as efficiently as possible, while assisting others and the District in utilizing the total supply where it is needed. A recent policy change denies this capability to any parcel where a District lien is in place. (Refer to **Appendix C**, Number 20).

The inherent conservation tool which exists within the District is the contract and subsequent managed price of delivered water. Price is a significant factor in determining and assuring the most efficient use and management of irrigation water by water users within the District. A high level of efficient distribution and application systems exists within the District and growers are continuously increasing the efficiency of these systems. The incentive to decrease the cost of applied water, when applied water does not result in increased yield, is the primary element of cost control as is the farm operator's desire to improve on-farm efficiency, through reduced labor and power costs.

The price of delivered surface water needs to be competitive with groundwater costs. This encourages the use of surface water to meet irrigation demands, when available, thereby preserving the groundwater resource.

Billing policies for delivered surface water supply have been developed and are periodically modified based on a multiple number of factors, many of which are beyond the control of the District. These include billing policies of the USBR, the water pricing policies and procedures of the USBR, the reserve position of the District, the payment capability of the farm operators and the basis of assurance provided by the farm operator that the District will receive payment. Significant farm operator and landowner input is both sought out and received with regard to these policies.

The pricing policy of the District is based on striving for the delivery of surface water on a price basis which is competitive with groundwater pumping costs. This encourages the use of

surface water to meet irrigation demands, when available, thereby preserving the groundwater resource for times when little or no surface water is available.

Water pricing policies established by the District are based on recouping a portion of the costs of securing and delivering the supply. As the basic goal for direct surface deliveries is to optimize the conjunctive use capabilities of the District and to deliver in-lieu pumping water when same is available, verification by the District is accomplished on a periodic basis to assure that the price for delivered water is competitive with power costs associated with pumping groundwater within the District. The District tracks, by way of external inquiries, as well as landowner input, the costs associated with groundwater pumping and utilizes this input to verify the competitiveness of the established price for District supplies.

The billing process is fashioned in such a manner that, for delivered supplies, the farm operators are charged for water on a metered basis and billed following deliveries. In this fashion, farm operators are encouraged only to utilize that water which they need and are not penalized for unused water which may be available.

Certain growers have a historical habit of retaining, undelivered, all or a portion of the allocated portion of their declared available supply for the entire year. They opt to act in this manner to retain the supply so it is available in the event of the failure of a groundwater well or related pump and motor installation. The District has implemented rules and regulations to discourage this "insurance policy" attitude and its related impacts on District delivered water costs. The rules and regulations require that a party retaining their water supply in this fashion, even if it results in the available supply not being delivered, must pay for the cost of the water. The payment requirement grew out of the prior procedures where growers would retain their allocation, never run the water and no penalty would apply for making those decisions. The Board of Directors felt that, given the demand for surface water, such actions should be discouraged.

7. *a) Line or pipe ditches and canals*

Not applicable. The District's distribution system is a closed pipeline system.

b) Construct regulatory reservoirs

Regulatory reservoirs required for proper system operation have been constructed.

8. *Increase flexibility in water ordering by, and delivery to, water users*

See **Attachment K**, contractor 'agricultural water order' form
See Section 3.B.4

Ordering flexibility has been optimized. Orders can be hand delivered, phoned in, faxed in or electronically transmitted. Consideration being given to short of normal time shut-off

capability, potentially with coverage of costs associated with extra staff time associated with modified service termination procedures.

9. Construct and operate district spill and tailwater recovery systems

All District spills are to the existing regulatory reservoirs as the delivery system consists of closed, pressurized pipelines. On farm tailwater, if any, is contained to grower lands. No water, once delivered, is returned to the District distribution system.

10. Plan to Measure Outflow

The District distributes water supply through a closed, low-head piped system. Operational spills are minimal and are contained in regulatory reservoirs which are placed in locations in the District design to accept said waters and to recharge same to the groundwater reservoir. The distribution system is operated exclusively by District personnel, therefore minimizing such spill events. There are no outflows from the District. The District requests exemption from implementing this BMP as there are no outflows to measure or outflow locations where measuring devices can be installed.

Total # of outflow (surface) locations/points 0
Total # of outflow (subsurface) locations/points 0
Total # of measured outflow points 0
Percentage of total outflow (volume) measured during report year None

Identify locations, prioritize, determine best measurement method/cost, submit funding proposal

Location & Priority	*Estimated cost (in $1,000s)*				
	2009	*2010*	*2011*	*2012*	*2013*
There are no outflows from the District.	$0	$0	$0	$0	$0

11. Optimize conjunctive use of surface and ground water

The nature of the water supply available to the District is such that it can only supply supplemental water to the farm operators within the District. The District makes no guarantees or warranties as to the delivery of surface waters and has no areas which rely solely on the delivery of such supplies. Decisions are made on at least an annual basis as to whether or when surface water will be made available to the farm operators. There are periodic modifications made to the initial decision during years when considerable modification is made to the declaration of available supply by Reclamation and by reservoir release operations during the flood control season. In

addition to the decision being based on information such as a determination by Reclamation as to the quantity of water available, added variables, such as the timing of the availability of such supplies based on storability characteristics in Millerton Reservoir and the crop types of farm operators, influence the decision.

To the maximum extent possible, the District establishes the delivery schedule on a basis to meet demands of the farm operators. Due to soil characteristics in the area, the District cannot deliver water for accrual to the groundwater basin which is not demanded instantaneously by the farm operators and then later retrieve supply from that reservoir on a schedule which farm operators control in order to meet crop demands.

12. Automate Distribution and/or drainage structures

In 2011, the District finished automation of all four of its turnouts and delivery main lines. This included fifteen (15) junction boxes (that regulate gravity flow head down each main line), four reservoirs (mitigating reservoirs) and to large lateral controls. This effort cost nearly $500,000 and has met the District's operational objectives. In addition, we feel this effort allows us to more closely and quickly respond to change demand in the system which has substantially reduced flows to our gravity side mitigating reservoirs which reduces operational water loss.

13. Facilitate or promote water customer pump testing and evaluation
See **Attachment F**, Notices of District Education Programs and Services Available to Customers

The District has and will continue to provide information to the growers relative to the availability of pump testing and efficiency services provided by the serving utility or local pump companies. The involvement of the District with private pump efficiencies is related to water conservation and overall resource management. The fact that a farmer may apply a given amount of water to a field with a pump which is operating at a less than optimum efficiency does affect the application time and the total quantity of water which is being demanded by the crop. With Board approval of this Plan, the District has plans to initially distribute and continuously make available a memorandum informing landowners with a listing of local participating pump test companies.

14. Mapping

GIS maps	*Estimated costs (in $1,000s)*[1]				
	2011	*2012*	*2013*	*2014*	*2015*
Layer 1 – Distribution system/base	*7*	*1*	*1*	*1*	*1*
Layer 2 – Drainage system (None)					
Suggested layers:					
Layer 3 – Ground water information	1	0	0	0	0
Layer 4 – Soils map (complete)					
Layer 5 – Natural & cultural resources (None)					
Layer 6 – Problem areas (None)					

[1]In thousands of dollars.

C. Provide a 5-Year Budget for Implementing BMPs

Amount Actually Spent During Current Year

Year 2015

Bmp #	BMP Name	Budgeted Expenditure (not including staff time)	Staff Hours
A1	Measurement	25,000	925
A2	Conservation Staff	1,000	6
A3	On-farm evaluations/water delivery info	0	0
	Irrigation Scheduling	475	25
	Water Quality	0	0
	Agricultural Education Program	1,000	10
A4	Quantity Pricing	0	0
A5	Contractor's Pumps	6,000	24
B1	Alternative Land Use	0	0
B2	Urban Recycled Water Use	0	0
B3	Financing of On-Farm Improvements	0	4
B4	Incentive Pricing	0	8
B5	Line of Pipe Canals/Install Reservoirs	30,000	1,000
B6	Increase Delivery Flexibility	0	0
B7	District Spill/Tailwater Recovery Systems	0	0
B8	Measure Outflow	0	0
B9	Optimize Conjuctive Use	16,000	80
B10	Automate Canal Structures	0	0
B11	Customer Pump Testing	0	0
B12	Mapping	0	0
	Total	**79,475**	**2,082**

Projected Summary for second year

Year 2016

Bmp #	BMP Name	Budgeted Expenditure (not including staff time)	Staff Hours
A1	Measurement	15,000	800
A2	Conservation Staff	2,000	30
A3	On-farm evaluations/water delivery info	1000	8
	Irrigation Scheduling	100	25
	Water Quality	0	0
	Agricultural Education Program	3,000	10
A4	Quantity Pricing	0	0
A5	Contractor's Pumps	0	8
B1	Alternative Land Use	0	0
B2	Urban Recycled Water Use	300	4
B3	Financing of On-Farm Improvements	300	4
B4	Incentive Pricing	0	8
B5	Line of Pipe Canals/Install Reservoirs	25,000	80
B6	Increase Delivery Flexibility	0	0
B7	District Spill/Tailwater Recovery Systems	0	0
B8	Measure Outflow	0	0
B9	Optimize Conjuctive Use	16,000	80
B10	Automate Canal Structures	0	0
B11	Customer Pump Testing	0	0
B12	Mapping	0	0
	Total	**62,700**	**1,057**

Projected Summary for third year

Year 2017

Bmp #	BMP Name	Budgeted Expenditure (not including staff time)	Staff Hours
A1	Measurement	15,000	800
A2	Conservation Staff	2,000	30
A3	On-farm evaluations/water delivery info	1000	8
	Irrigation Scheduling	100	25
	Water Quality	0	0
	Agricultural Education Program	3,000	10
A4	Quantity Pricing	0	0
A5	Contractor's Pumps	0	8
B1	Alternative Land Use	0	0
B2	Urban Recycled Water Use	300	4
B3	Financing of On-Farm Improvements	300	4
B4	Incentive Pricing	0	8
B5	Line of Pipe Canals/Install Reservoirs	25,000	80
B6	Increase Delivery Flexibility	0	0
B7	District Spill/Tailwater Recovery Systems	0	0
B8	Measure Outflow	0	0
B9	Optimize Conjuctive Use	16,000	80
B10	Automate Canal Structures	0	0
B11	Customer Pump Testing	0	0
B12	Mapping	0	0
	Total	**62,700**	**1,057**

Projected Summary for fourth year

Year 2018

Bmp #	BMP Name	Budgeted Expenditure (not including staff time)	Staff Hours
A1	Measurement	15,000	800
A2	Conservation Staff	2,000	30
A3	On-farm evaluations/water delivery info	1000	8
	Irrigation Scheduling	100	25
	Water Quality	0	0
	Agricultural Education Program	3,000	10
A4	Quantity Pricing	0	0
A5	Contractor's Pumps	0	8
B1	Alternative Land Use	0	0
B2	Urban Recycled Water Use	300	4
B3	Financing of On-Farm Improvements	300	4
B4	Incentive Pricing	0	8
B5	Line of Pipe Canals/Install Reservoirs	25,000	80
B6	Increase Delivery Flexibility	0	0
B7	District Spill/Tailwater Recovery Systems	0	0
B8	Measure Outflow	0	0
B9	Optimize Conjuctive Use	16,000	80
B10	Automate Canal Structures	0	0
B11	Customer Pump Testing	0	0
B12	Mapping	0	0
	Total	**62,700**	**1,057**

Projected Summary for fifth year

Year 2019

Bmp #	BMP Name	Budgeted Expenditure (not including staff time)	Staff Hours
A1	Measurement	15,000	800
A2	Conservation Staff	2,000	30
A3	On-farm evaluations/water delivery info	1000	8
	Irrigation Scheduling	100	25
	Water Quality	0	0
	Agricultural Education Program	3,000	10
A4	Quantity Pricing	0	0
A5	Contractor's Pumps	0	8
B1	Alternative Land Use	0	0
B2	Urban Recycled Water Use	300	4
B3	Financing of On-Farm Improvements	300	4
B4	Incentive Pricing	0	8
B5	Line of Pipe Canals/Install Reservoirs	25,000	80
B6	Increase Delivery Flexibility	0	0
B7	District Spill/Tailwater Recovery Systems	0	0
B8	Measure Outflow	0	0
B9	Optimize Conjuctive Use	16,000	80
B10	Automate Canal Structures	0	0
B11	Customer Pump Testing	0	0
B12	Mapping	0	0
	Total	**62,700**	**1,057**

Section 4: Best Management Practices for Urban Contractors

Not Applicable – The District is not an Urban contractor

Section 5: District Water Inventory Tables

Table 1(a)

Surface Water Supply (2014 Monthly)

Calendar Year 2014 Month	Federal Ag Water (acre-feet)	Federal Non-Ag Water (acre-feet)	State Water (acre-feet)	Local Water (acre-feet)	Other Water (define) (acre-feet)	Upslope Drain Water (acre-feet)	Total (acre-feet)
January	0	0	0	0	0	0	0
February	0	0	0	0	0	0	0
March	0	0	0	0	0	0	0
April	0	0	0	0	0	0	0
May	0	0	0	0	0	0	0
June	0	0	0	0	0	0	0
July	0	0	0	0	76	0	76
August	0	0	0	0	324	0	324
September	0	0	0	0	692	0	692
October	0	0	0	0	967	0	967
November	0	0	0	0	0	0	0
December	0	0	0	0	0	0	0
TOTAL	0	0	0	0	2,059	0	2,059
Average	0	0	0	0	172	0	172

Other Water Delivered: Exchange of Northern California purchased supplies delivered to the Exchange Contractors through San Luis Reservoir in exchange for 2,059 AF of supply in Millerton delivered to Lindmore Irrigation District

Table 2

Ground Water Supply

Calendar Year 2014 Month	District Ground Water (acre-feet)	Private Ground Water * (acre-feet)
January	-	1,024
February	-	2,113
March	-	1,713
April	-	3,088
May	-	11,270
June	-	13,115
July	-	15,888
August	-	14,950
September	-	4,785
October	-	2,250
November	-	800
December	-	750
Total	-	71,746

** estimated*

Table 2 indicates that extractions (71,746 af) exceeded safe yield (42,000 af) for the year. Water year 2014 was a "very dry" water year. Annual precipitation was roughly 50% of normal. Therefore, water percolated from the irrigation leaching fraction was estimated at 14,785 acre feet as the amount of ground moisture was substantially reduced as a result of reduce annual precipitation. In addition, there wasn't a federal water supply allocation from the USBR.

Table 3

Total District Water Supply

Calendar Year 2014 Month	Surface Water Total (acre-feet)	District Ground Water (acre-feet)	Recycled M&I (acre-feet)	Total District Supply (acre-feet)
January	-	-	-	-
February	-	-	-	-
March	-	-	-	-
April	-	-	-	-
May	-	-	-	-
June	-	-	-	-
July	76	-	-	76
August	324	-	-	324
September	692	-	-	692
October	967	-	-	967
November	-	-	-	-
December	-	-	-	-
Total	2,059	-	-	2,059

Table 4

Distribution System

2009 Canal, Pipeline, Lateral, Reservoir	Length (feet)	Width (feet)	Surface Area (square feet)	Precipitation (acre-feet)	Evaporation (acre-feet)	Spillage (acre-feet)	Seepage (acre-feet)	Total (acre-feet)
Pipelines	649,440	0	0	0	0	0	0	0
	0	0	0	0	0	0	0	0
	0	0	0	0	0	0	0	0
	0	0	0	0	0	0	0	0
	0	0	0	0	0	0	0	0
	0	0	0	0	0	0	0	0
	0	0	0	0	0	0	0	0
	0	0	0	0	0	0	0	0
	0	0	0	0	0	0	0	0
	0	0	0	0	0	0	0	0
	0	0	0	0	0	0	0	0
TOTAL	649,440	0	0	0	0	0	0	0

Table 5: Crop Water Needs

2014 Crop Name	Area (crop acres)	Crop ET (AF/Ac)	Leaching Requirement (AF/Ac)	Cultural Practices (AF/Ac)	Effective Precipitation (AF/Ac)	Appl. Crop Water Use (Acre-Feet)
Alfalfa	1,418	5.00	0.200	-	0.40	6,806
Almonds	675	2.80	0.022	-	0.40	1,635
Apples	55	3.70	0.023	-	0.40	183
Avocados	11	3.70	0.023	-	0.40	37
Berries	40	1.90	0.012	-	0.20	68
Cherries	157	3.70	0.023	-	0.40	522
Corn (Silage)	1,197	3.40	0.012	-	0.20	3,845
Corn; sweet	314	3.40	0.012	-	0.20	1,009
Cotton (Upland)	209	3.90	0.005	-	0.10	795
Kiwis	57	3.80	0.020	-	0.20	206
Grapefruit	50	2.90	0.100	0.30	0.20	155
Grapes, table	1,554	3.80	0.020	-	0.20	5,625
Lemons and Limes	40	2.90	0.100	0.30	0.20	124
Persimmions	33	3.70	0.023	-	0.30	113
Olives	3,736	2.80	0.100	-	0.30	9,714
Oranges, Tangerines	11,996	2.90	0.100	0.30	0.20	37,188
Peaches	166	3.70	0.023	-	0.40	552
Pecans	57	2.80	0.022	-	0.40	138
Plums	515	3.70	0.023	-	0.40	1,711
Prunes	70	3.70	0.023	-	0.40	233
Pomegranates	242	3.70	0.023	-	0.40	804
Total Nursery	32	1.90	0.120	-	0.20	58
Walnuts	680	2.80	0.022	-	0.40	1,647
Misc. Crops	41	2.80	0.012	-	0.20	107
Crop Acres	**23,345**					**73,274**

Table 6

2014 District Water Inventory

Supply	Data Source	Inv. Impact	Acre Feet
Water Supply	Table 3	Begin	-
Riparian ET	(Distr. And Drain)	minus	-
Groundwater Recharge	(Intentional - Ponds, injection)	minus	-
Seepage	Table 4	minus	-
Evaporation - Precipitation	Table 4	minus	-
Spillage	Table 4	minus	-
Transfers/exchanges/trades/wheeling (into or out of the District)	(into or out of the District)	plus/(minus)	2,059
Non-Agri Deliveries (delivered to non-ag customers)	(delivered to non-ag customers)	minus	-
Water Available for sale to agricultural customers	(sum of above)		2,059
Compare the above line with the next line to help find data gaps			
2014 Actual Inventory			
District Water Sales	From District Sales Records		2,059
Private Groundwater	Table 2		71,746
Crop Water Needs	Table 5		73,274
Drainwater Outflow	(tail and tile not recycled)		-
Percoloation from Agricutural Land	(calculated)		-

Note: Groundwater was pumped to fill the distribution system prior to start-up. The distribution system was pumped down at the end of the irrigation season and allowed to percolate back to groundwater. As multiple pumps were used to dewater the system and they were of the portable type, no physical measurements were taken of the pumped quantity. The fill and void quantities should be almost the exact same amount. The balance of the pumping was to cover system leaks & seepage with pumpage being more than offset by percolation from the leaching fraction.

Table 7

Influence on Groundwater and Saline Sink

2014

Agric Land Deep Perc + Seepage + Recharge - Groundwater Pumping = District Influence on	0
Estimated actual change in groundwater storage, including natural recharge	0
Irrigated Acres (from Table 5)	23,345
Irrigated acres over a perched water table	0
Irrigated acres draining to a saline sink	0
Portion of percolation from agri seeping to a perched water table	0
Portion of percolation from agri seeping to a saline sink	0
Portion of On-Farm Drain water flowing to a perched water table/saline sink	0
Portion of Dist. Sys. Seep/leaks/spills to perched water table/saline sink	0
Total (AF) flowing to a perched water table and saline sink	0

Table 8

Annual Water Quantity Delivered Under Each Right or Contract

Calendar Year 2014 Month	Federal Ag Water (acre-feet)	Federal Non-Ag Water (acre-feet)	State Water (acre-feet)	Local Water (acre-feet)	Other Water (define) (acre-feet)	Upslope Drain Water (acre-feet)	Total (acre-feet)
2006	41,727	0	0	0	0	0	41,727
2007	20,277	0	0	0	0	0	20,277
2008	33,984	0	0	0	0	0	33,984
2009	31,578	0	0	0	0	0	31,578
2010	41,603	0	0	0	0	0	41,603
2011	39,975	0	0	0	0	0	39,975
2012	24,843	0	0	0	0	0	24,843
2013	28,271	0	0	0	0	0	28,271
2014	-	0	0	0	2,059	0	2,059
2015	-	0	0	0	1,649	0	1,649
TOTAL	262,258	0	0	0	3,708	0	265,966
Average	26,226	0	0	0	371	0	26,597

Other Water Delivered: Exchange of Northern California purchased supplies delivered to the Exchange Contractors through San Luis Reservoir in exchange for like water supply in Millerton and delivered to Lindmore Irrigation District

PLATES

FIVE YEAR UPDATE

WATER MANAGEMENT PLAN

LINDMORE IRRIGATION DISTRICT

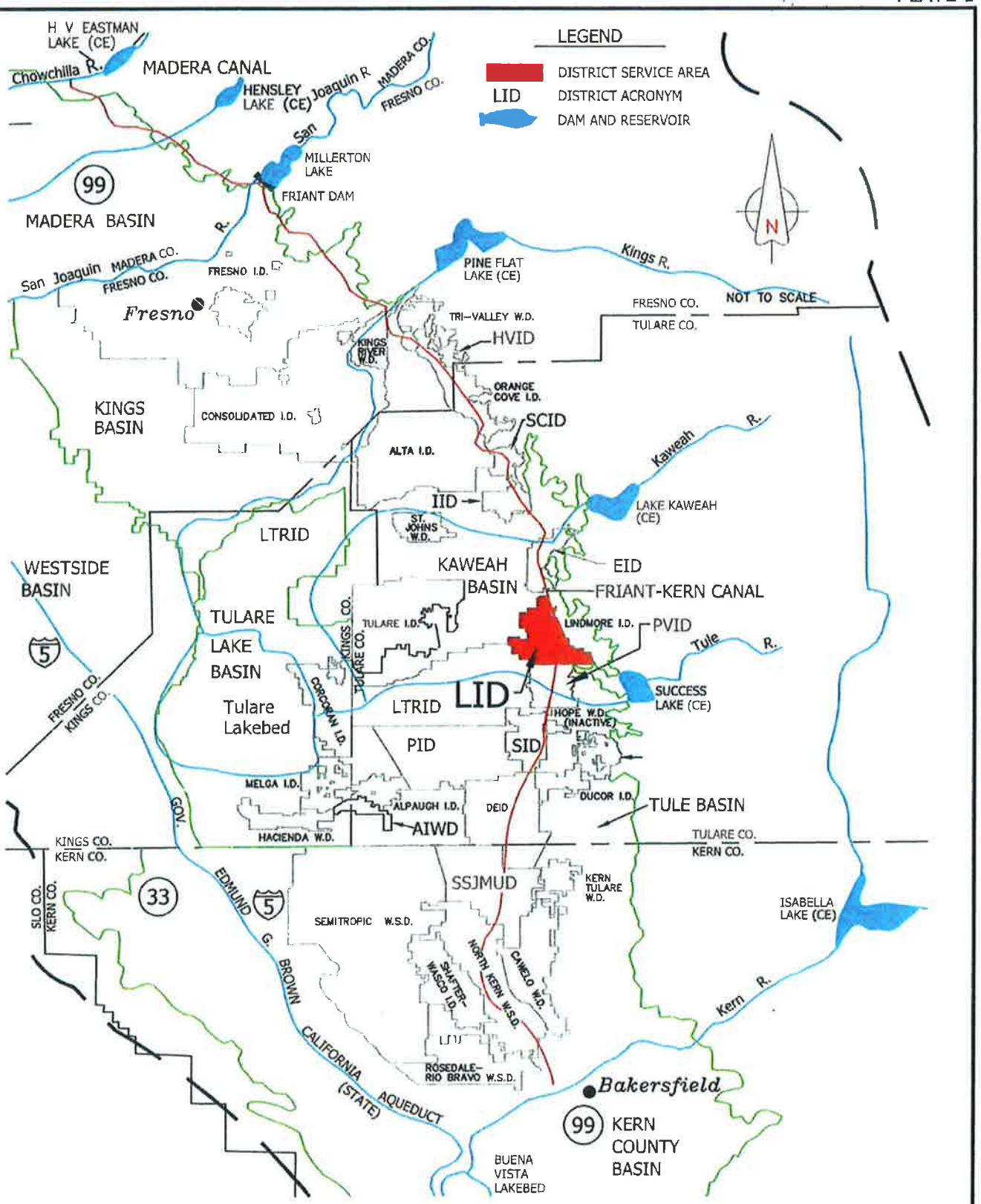

LOCATION MAP
AGRICULTURAL WATER MANAGEMENT PLAN
LINDMORE IRRIGATION DISTRICT

L:\LINDMORE I ATION DISTRICT\WMP UPDATE 2011\LID-PLATES-2011.dwg

ATTACHMENT A
DISTRICT FACILITIES MAP
FIVE YEAR UPDATE
WATER MANAGEMENT PLAN
LINDMORE IRRIGATION DISTRICT

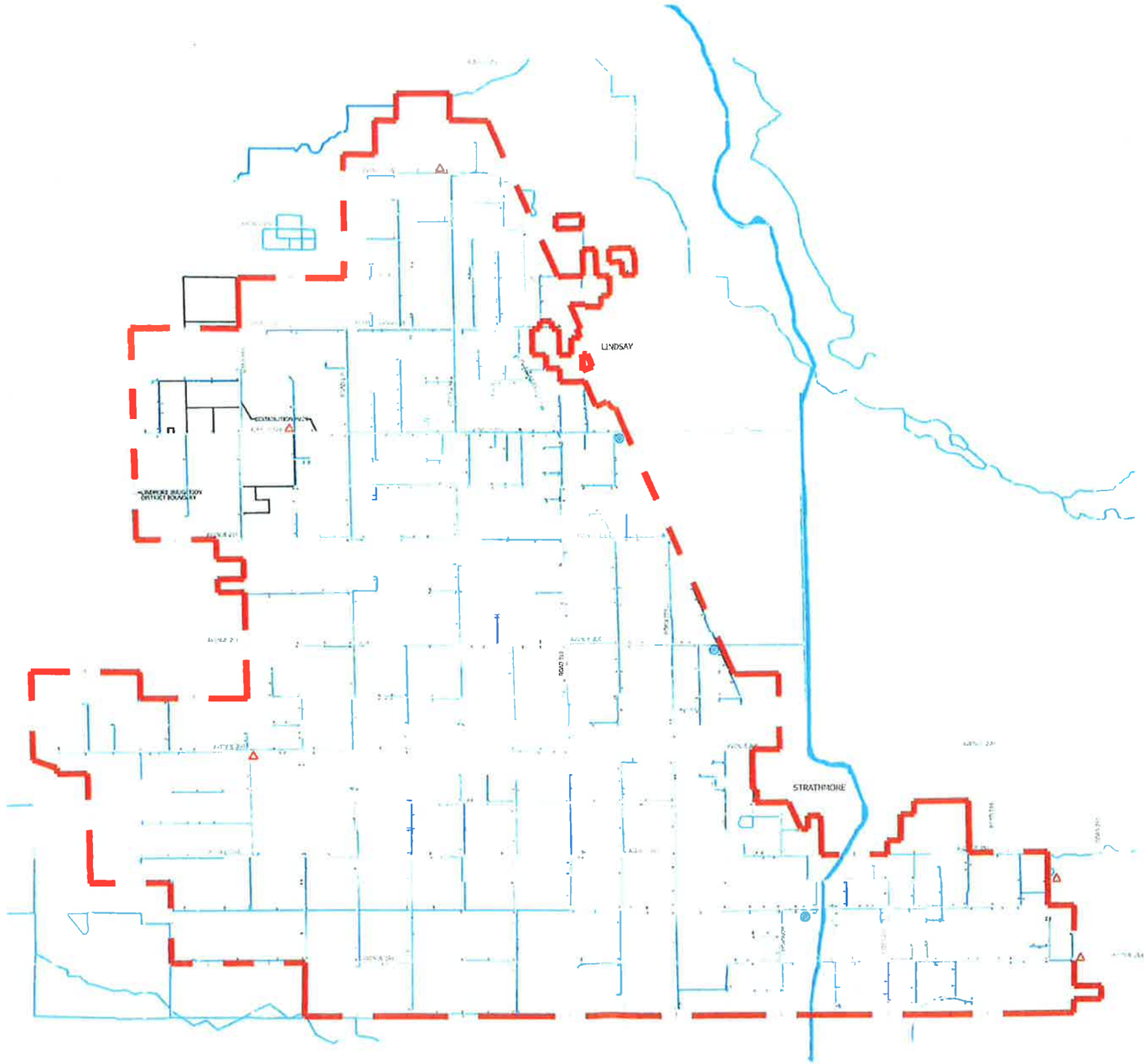

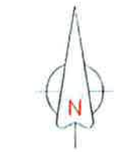

SCALE: 1" = 6,000'

LEGEND

- DELIVERY POINTS WITH V-METER
- DELIVERY POINTS WITH LINE METER
- JUNCTION BOX
- SCREEN
- PUMP
- RESERVOIR/RECOVERY PUMPS
- WELL

DISTRIBUTION SYSTEM
AGRICULTURAL WATER MANAGEMENT PLAN
LINDMORE IRRIGATION DISTRICT

L:\LINDMORE IRRIGATION DISTRICT\WMP UPDATE 2011\LID-PLATES-2011.dwg

KELLER/WEGLEY

ATTACHMENT B
DISTRICT SOILS MAP
FIVE YEAR UPDATE
WATER MANAGEMENT PLAN
LINDMORE IRRIGATION DISTRICT

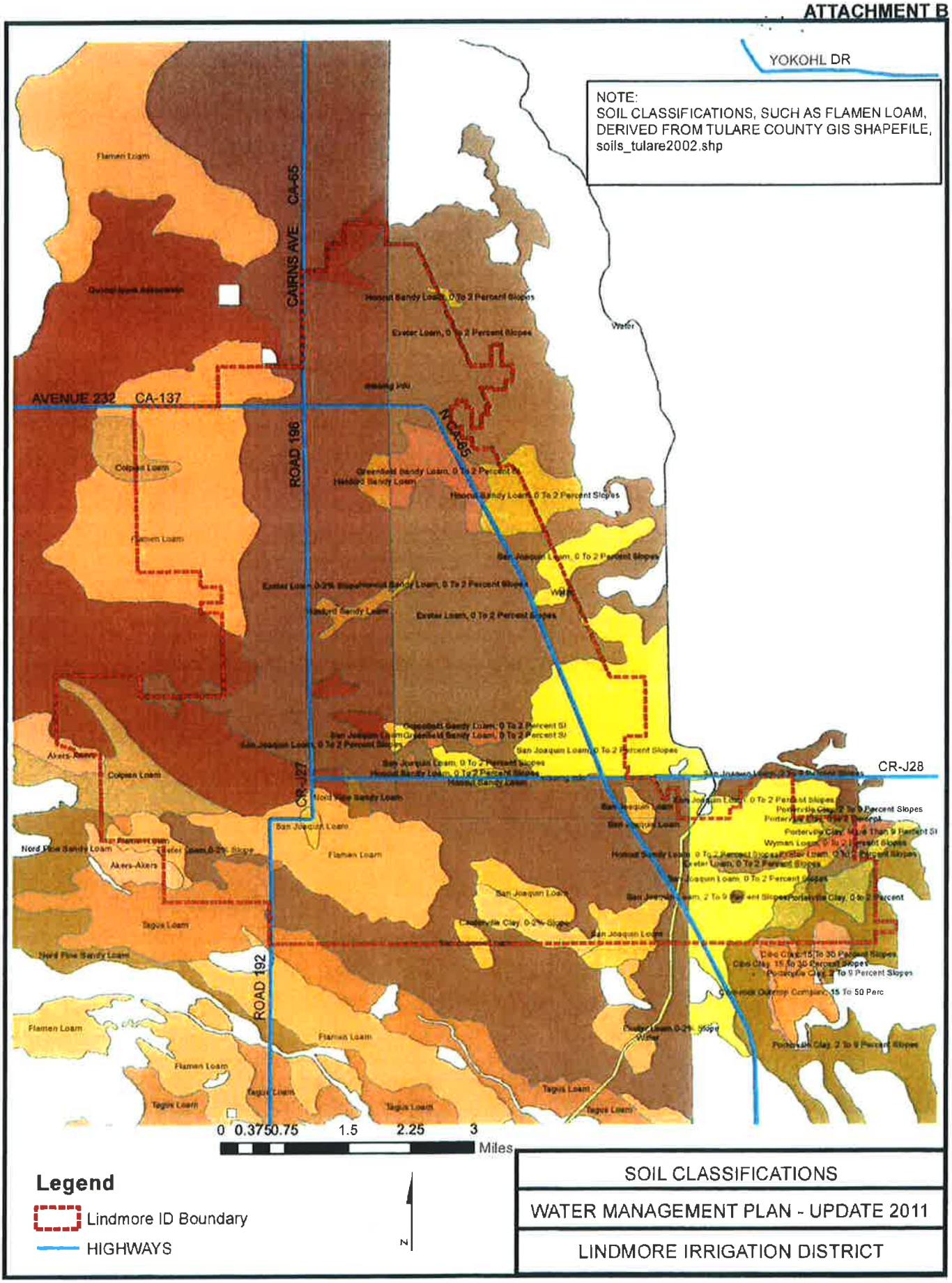

SOIL CLASSIFICATIONS

WATER MANAGEMENT PLAN - UPDATE 2011

LINDMORE IRRIGATION DISTRICT

Path: S:\Lindmore ID\WMP UPDATE 2011\UPDATE 2011.mxd

KELLER/WEGLEY

ATTACHMENT C
DISTRICT RULES AND REGULATIONS
FIVE YEAR UPDATE
WATER MANAGEMENT PLAN
LINDMORE IRRIGATION DISTRICT

LINDMORE IRRIGATION DISTRICT
RULES AND REGULATIONS
ADOPTED BY ACTION OF THE BOARD ON MARCH 12, 2013

NOTE: INFORMATION IN THE BODY OF THE RULES THAT ARE IN BOLD INDICATE A POLICY CHANGE FROM PRIOR YEARS. PLEASE CONTACT THE DISTRICT OFFICE IF YOU NEED CLARIFICATION OF ANY RULES.

ALLOCATION OF WATER

1. At the beginning of each irrigating season all water allocated to the Lindmore Irrigation District by the United States Bureau of Reclamation shall be pro-rated to each acre of land within the District equally according to the latest Assessed Valuation of the land (Article 2, Section 22250, Water Code of the State of California). (Board Policy exception – See item #3). Billings for the use of water will be billed monthly based on the quantity of water used by each landowner during the preceding month.

2. Unused quantities pro-rated water will be billed after the end of the season and payment shall be due no later than December 31 of each year. The end of the season will be when the distribution system operation is closed down for maintenance and pipeline replacement (generally the day before Thanksgiving). Unused water shall not be carried over to succeeding irrigation years.

3. No water shall be apportioned to parcels of five acres or less unless a specific request is made by the landowner. The standby charge will remain on those parcels that requested pro-rate.

4. Water pro-rated to any parcel may be transferred from one parcel of land to another, and from one parcel to another, including to other landowners within the boundaries of Lindmore Irrigation District (Article 2, Section 22250, Water Code). Prior to said transfer all current standby, water charges or fees due the District must be paid in full. Forms for such transfer may be secured at the Lindmore Irrigation District office. Such transfers can occur anytime during the operating water season (typically March 1 through the Monday before Thanksgiving). Landowners with the need and ability to beneficially use water in excess of their pro-rated allotment may contact the District to inquire if additional water is available due to another landowner's nonpayment of District fees such as the nonpayment of standby charges that have resulted in liens being placed on such property. Upon such an inquiry, the District hereby determines, pursuant to the Public Records Act, to release the names and addresses (but not usage records pursuant to Government Code § 6254.16) of landowners that the District has recorded liens on and who are not current on all payments so that the inquiring landowner may contact the delinquent landowner regarding a proposed transfer. Notwithstanding anything to the contrary, no transfer may occur without either the inquiring landowner or the delinquent landowner first paying all current standby, water charges and/or other fees due to the District. Once the transfer is approved, the obligation to pay for the water transferred shall be an obligation of the transferee.

5. All water introduced into the District is the property of the District and is subject to diversion, control and use by the District. No landowner or consumer acquires any proprietary right in the water by reason of such use, nor does such landowner or consumer acquire any right to resell or transfer (other than as provided herein) the water purchased or used, nor the right to use it on the premises or for a purpose other than that for which it was applied.

If a party uses water on land outside the District that was applied for use within the District, whether by routing through a conduit, first flowing the water through the land within the District, by recapturing it from drains, or otherwise, the District may (i) refuse future service; (ii) charge for the use of water on the outside land, at a rate fixed by the Board; and/or (iii) condition further receipt of water upon the landowner making such physical changes in his fields or irrigation system that the Board deems necessary and adequate to assure the District that no future use of District water to outside lands will occur.

6. Landowners having water entitlements greater than they can use will be allowed to assign their excess water to the "District Common Pool" for use by other growers in the District. However, Landowner shall not be relieved from his/obligation to pay for pro-rated supply until all water in the pool is used. If there is a balance in the pool at the end of the operating season, the assignee will be responsible to pay for an amount of the water in the pool in proportion to the relationship of pro-rated water to the total pool, and will then be billed for the water as unused. The annual deadline for the pool is typically the last business day of July. However, in the annual allocation and rate letter this date will be noted.

DISTRIBUTION OF WATER

7. The distribution of water shall be under the general supervision of the Operations Officer.

8. Orders for turn-on and turn-off shall be made at the office of the District, or telephoned to the office (559) 562-2534. No orders except those made through the office as above directed are authorized or accepted.

9. Orders for turn-on and turn-off shall be made not later than 9:00 o'clock in the morning of the day before the delivery of water is requested. Orders will be accepted any time during the day, for delivery at a time later than the following day.

10. No changes in water delivery, except for emergencies, will be made on Sundays.

11. No order for a flow of less than ten inches will be accepted for delivery through a six inch or larger meter, except where the user is willing to accept a charge for a ten inch flow, or to install a smaller meter or adapter at their cost.

12. On the day the water is ordered on or off, the watertender will service the meter at the time he passes on his regular run for the day. Orders for a certain hour cannot be accepted, but the watertender will co-operate with the wateruser as far as is possible to do so compatible with the efficient operation of the system. It is the wateruser's responsibility to see that the meter has been turned on or off as ordered.

13. When water has been turned on it shall run continuously day and night at the flow set by the watertender until he turns it off, and no turn-on will be made for runs of less than 24 hours. Changes to the flow must be called in to the District and a District staff person shall make the necessary adjustment. Excessive call backs during regular work periods will result in a charge (see Fines/Charges below). Call backs after regular hours, except for a District emergency or a power failure, will be assessed a charge (see Fines/Charges below).

14. Water used each month will be billed the first part of the following month.

15. Bills for water are due and payable at the office of Lindmore Irrigation District upon presentation.

16. Bills may be paid at the office of the District at **315 E. Lindmore Avenue in Lindsay, California** or payment may be mailed to Post Office Box 908, Lindsay, California 93247-0908.

17. If bills for water are not paid on or before the 25th (postmarks accepted) of the month the bills are presented, the account becomes delinquent and will be assessed a penalty.

18. A penalty for delinquent accounts (as noted above) will be charged at the rate of one and one half (1 ½) percent per month.

19. No water will be delivered to any land upon which there is a delinquent water account. Similarly, delinquent landowners shall not be allowed to transfer water to another landowner within the District without first bringing all delinquent accounts current and paid in full.

20. No water will be delivered to any land if the wateruser's stand-by account is delinquent.

Though an allocation of water will occur on all eligible accounts at the beginning of the water season, Landowners must have all delinquent accounts cleared prior to receiving project water.

GENERAL

21. The Board of Directors of Lindmore Irrigation District may regulate the use of water to prevent waste (Article 2, Section 22250, Water Code).

22. The landowner will be responsible for any leaks developing in the discharge side of meter stands.

23. No person shall modify, molest, tamper with or interfere with structures or devices used for the delivery of water owned by the district (typically all items before the turnout valve) without express written permission of the District.

24. The structures and lines of the District's system shall neither be used for the application of fertilizer nor for any other purpose which might damage or interfere with the operation of the system.

25. Water furnished by Lindmore Irrigation District shall not be used for drinking purposes, is not treated to make it safe for drinking purposes, and any person making such use of Lindmore water does so contrary to the purpose of the District, violating this definite order of the Board of Directors of the District at your own risk.

26. Any landowner in the Lindmore Irrigation District who sells a portion of a parcel of land served by one meter shall reach an agreement with the buyer relative to water service, and if such agreement indicated the installation of another meter, such meter shall be installed by Lindmore Irrigation District at its convenience and all costs of the installation shall be paid by either the seller of the land or the purchaser, as their agreement sets forth.

27. Persons interfering with the regulation of water in the District conduits are subject to prosecution and or fines. If any person takes water without permission of the District or authorized District staff, they may be subject to criminal prosecution and fines.

28. All water introduced into the District by District works is District water and is subject to re-diversion and use by the District. All such water, whether waste and/or seepage water, intercepted and used by consumers will be charged for at the rate established by the District. All return flows from water served by the District shall become the property of the District when such return flows enter a District lateral or surface drainage system, leave the boundaries of the landowner's property, or percolate into the District's sub-surface drainage system or other District facility. All such water, whether return flow, tail water, waste, and/or seepage water is subject to re-diversion and use by the District.

29. The agents, staff and employees of the District shall have free access at all times to the property being supplied with water from the District's system for the purpose of examining the lands irrigated, the flow of water thereon, the water facilities and any private canal, ditches, sumps or drains, and for any and all other lawful purposes.

30. Wateruser's shall be required at all times to keep their ditches and facilities for conveying and distributing waters in good condition so that water can be used without undue loss or unreasonable waste, and without damage to other lands. Lands must be prepared so that water can be distributed without waste and landowners shall construct adequate drainage facilities so that adjacent land will not be damaged. The District may refuse to deliver water to a consumer whose ditches and structures are not in a proper state of repair or whose land is not prepared to convey or use water in an economic and non-wasteful manner. Landowners shall use District water in a reasonable manner by applying said water to beneficial use.

EMERGENCIES

31. Under emergency circumstances, the District may be required to shut off all or some meters within in the District. If such an event occurs, District staff will inform all affected wateruser's when it is to be shut off and turned on whenever practicable.

32. To report an emergency or an emergency shut-off during business hours (weekdays at 7 am – 4:00 pm) simply call the District office at (559) 562-2534. During non-business hours, please call the District Emergency Response Phone at (559) 333-2386. The Emergency Response phone is with someone at all times. Additional numbers for emergency response (other than District issues) can be located in your phone book.

FINES/CHARGES

33. A $50.00 charge will be assessed to the wateruser's account for each emergency turn-off requested after regular working hours, unless due to loss of electrical power at the power company meter or when the event is a District operational malfunction.

34. A $150.00 fine will be made for turning on any water meter without following the proper ordering procedure and a $150.00 fine will be made for turning off a water meter without proper notification.

35. A $25.00 charge will be assessed to a wateruser's account for each emergency shut off/modification request during regular business hours (except for in the case of a District emergency or power supplier failure) in excess of three times per meter per year.

CHANGE IN RULES AND REGULATIONS

36. These rules and regulations are adopted in whole or part annually and may be amended or changed at any time by action of the Board of Directors of Lindmore Irrigation District.

ATTACHMENT D
DISTRICT SAMPLE BILLS
FIVE YEAR UPDATE
WATER MANAGEMENT PLAN
LINDMORE IRRIGATION DISTRICT

Lindmore Irrigation District

P.O. Box 908
315 E. Lindmore
Lindsay, CA 93247
Telephone: (559) 562-2534
www.lindmoreid.com

LINDSAY, CA 93247

IRRIGATION WATER STATEMENT

Statement Date	9/30/2014
Account Number	BROW
Previous Balance	-13,200.00

Current Transactions:

Payments	Charges	Adjustments	Fines
-375.00	544.50	2,475.00	0.00

Current Balance	-10,555.50
Total Current Charges Due	10/25/2014
Total Amount Due	**0.00**

Balance Aging:

Current	0-30	31-60	61-90	91+
0.00	0.00	0.00	0.00	0.00

Allocation:

Allocated	Used Previously	Used this Month	Remaining
18.00	0.00	0.66	17.34

TRANSACTION DETAIL

Date	Type	WO	Field	Outlet	Work Order Dates	Meter Readings	AcFt	Correction	Rate	Amount
7/31	Previous Balance									-13,200.00
9/16	Payment									-375.00
9/30	Adjustment									2,475.00
										-11,100.00
9/24		46571	131455	88.4-3.3N-0.1E	9/22 - 9/24	20.79 - 21.45	0.66		825.00	544.50
			131455				**0.66**			**544.50**

PAYMENT COUPON

Please return this portion along with your payment by the due date

AMOUNT DUE

Account Number	BROW
Total Current Charges Due	10/25/2014
Total Amount Due	**0.00**

AMOUNT ENCLOSED

Amount Enclosed

Customer Address

Lindmore Irrigation District
P.O. Box 908
315 E. Lindmore
Lindsay, CA 93247

Lindmore Irrigation District
P.O. Box 908
315 E. Lindmore
Lindsay, CA 93247
Telephone: (559) 562-2534
FAX:
www.lindmoreid.com

STANDBY CHARGES

Statement Date	5/1/2016
APN Reference Number	199-180-005-000
Current Charges Due	6/20/2016
Total Amount Due	**0.00**
Minimum Amount Due	**0.00**

LINDSAY, CA 93247

TRANSACTION DETAIL

Date	Amount	Disp No.	Description
11/1/2015	125.00	1	First Billable
11/18/2015	-250.00		Payment by Check No. 5844
5/1/2016	125.00	2	Second Billable

SPECIAL MESSAGES

A late charge of 10% of the unpaid balance will be charged if not paid in full by 6/20/2016.

ACCOUNT SUMMARY

APN Reference Number	199-180-005-000
Customer Number	
APN Address	
Tax Year	2016
Acreage	10.000 Acres
Valuation	$250.00
Yearly Assessment	**$ 250.00**
First Installment	$ 125.00 due 12/20/2015
Second Installment	$ 125.00 due 6/20/2016
Current Balance	**$ 0.00**

Failure to pay first and second installments by the delinquent dates will result in additional charges including but not limited to late fees, publication costs, collection fees, property liens, and could eventually result in the sale of your property.

PAYMENT COUPON

Please return this portion along with your payment by the due date

AMOUNT DUE

APN Reference Number	**199-180-005-000**
Current Charges Due	**6/20/2016**
Total Amount Due	**0.00**
Minimum Amount Due	**0.00**

AMOUNT ENCLOSED

Amount Enclosed

Customer Number

Customer Address

LINDSAY, CA 93247

2

Lindmore Irrigation District
P.O. Box 908
315 E. Lindmore
Lindsay, CA 93247

ATTACHMENT E
DISTRICT WATER SHORTAGE PLAN
FIVE YEAR UPDATE
WATER MANAGEMENT PLAN
LINDMORE IRRIGATION DISTRICT

Attachment E is not applicable to the District. As per Section 1.H.1, any water shortage declaration by Reclamation is treated the same way as the annual allocation; that is, each year's allotment is pro-rated out to the District growers. The District will equally, to each acre of assessed land, allocate the total supply available. In any short water year, growers can make up the difference with private wells or purchase water from the District Pool, which is water returned to the District by growers not needing their full allotment in the current year.

ATTACHMENT F

DISTRICT MAP OF GROUNDWATER FACILITIES

FIVE YEAR UPDATE

WATER MANAGEMENT PLAN

LINDMORE IRRIGATION DISTRICT

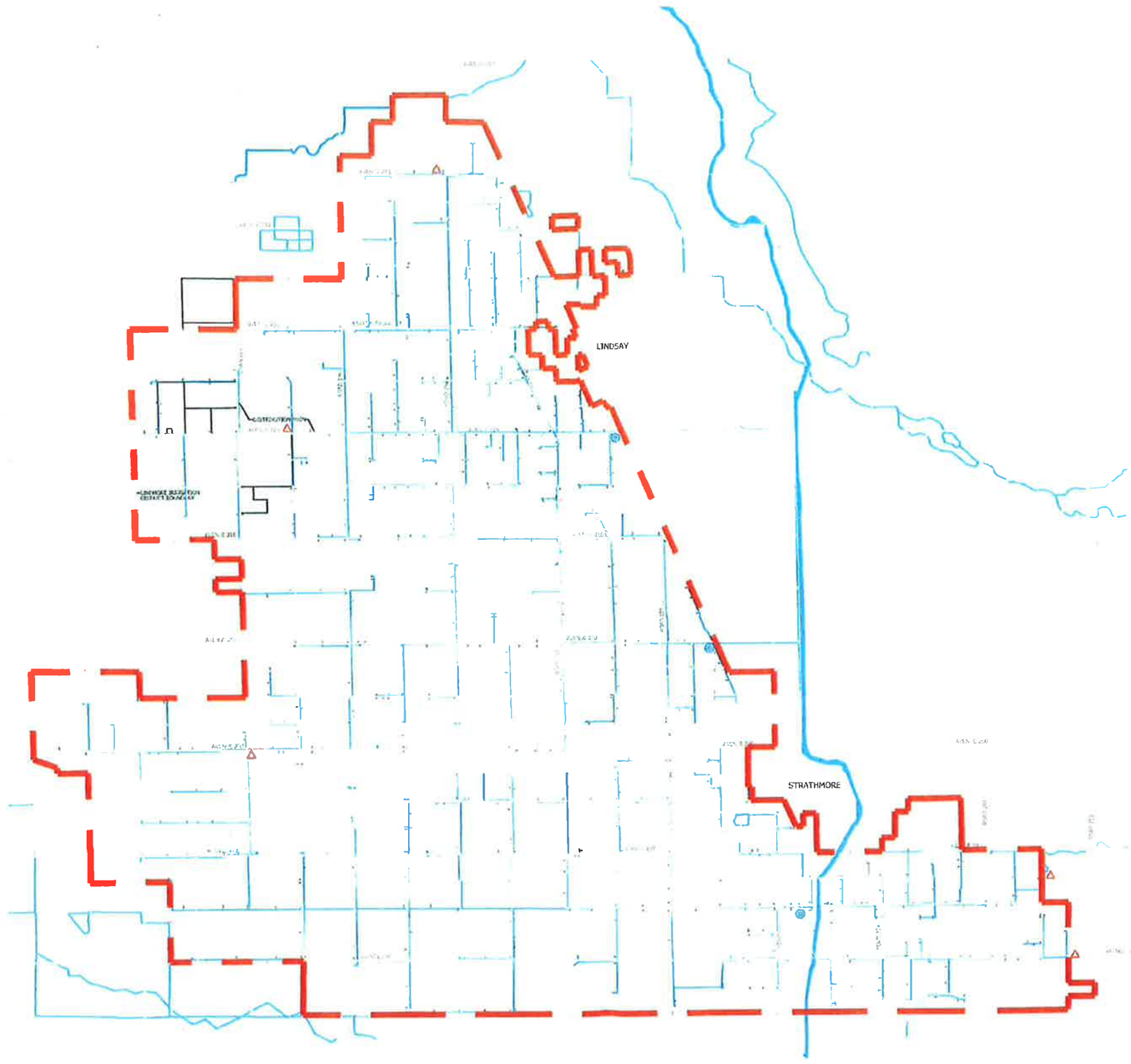

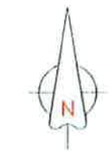

SCALE: 1" = 6,000'

LEGEND

- DELIVERY POINTS WITH V-METER
- DELIVERY POINTS WITH LINE METER
- JUNCTION BOX
- SCREEN
- PUMP
- RESERVOIR/RECOVERY PUMPS
- WELL

DISTRIBUTION SYSTEM
AGRICULTURAL WATER MANAGEMENT PLAN
LINDMORE IRRIGATION DISTRICT

L:\LINDMORE IRRIGATION DISTRICT\WMP UPDATE 2011\LID-PLATES-2011.dwg

KELLER/WEGLEY

ATTACHMENT G
GROUNDWATER MANAGEMENT PLAN
FIVE YEAR UPDATE
WATER MANAGEMENT PLAN
LINDMORE IRRIGATION DISTRICT

As per Section 2.B.5, the District is currently in negotiations with the Kaweah Delta Water Conservation District or in another forum of discussion regarding the management of groundwater in this area. For purposes of compliance with this plan needs, provided herein is the website for the 100 plus page Kaweah Delta Water Conservation District Groundwater Management Plan.

http://kdwcd.com/groundwater_management_plan_-_amended__2015_.pdf

The passage of the Sustainable Groundwater Management Act (SGMA) by the California State Legislature has created conflicting dynamics for water agencies in the State. In particular rules and regulations are still forthcoming as of February 8, 2016. The District will be considering its needs over the next several months and may be opting for something other than a groundwater plan relationship with the KDWCD. However, either way, its plan will be included in the entire Kaweah Sub-Basin plan development.

ATTACHMENT H
GROUNDWATER BANKING PLAN
FIVE YEAR UPDATE
WATER MANAGEMENT PLAN
LINDMORE IRRIGATION DISTRICT

Attachment H is not applicable to the District

ATTACHMENT I

ANNUAL POTABLE WATER
QUALITY REPORT – URBAN

FIVE YEAR UPDATE
WATER MANAGEMENT PLAN
LINDMORE IRRIGATION DISTRICT

Attachment I is not applicable to the District, they are not an Urban water provider.

ATTACHMENT J

NOTICE OF DISTRICT EDUCATION PROGRAMS AND SERVICES AVAILABLE TO CUSTOMERS

FIVE YEAR UPDATE
WATER MANAGEMENT PLAN
LINDMORE IRRIGATION DISTRICT

FRIANT WATER AUTHORITY
SAN JOAQUIN RIVER AND ASSOCIATED WATER DATA

CROP COEFFICIENTS 3-Feb-16

Crop (Description)	Today	Avg. Prev. 7 Days	Avg. Next 7 Days
Alfalfa (average)	0.95	0.95	0.95
Almonds (Feb. 20 leafout, Nov. 15 leafdrop)	0.00	0.00	0.00
Almonds (Mar. 1 leafout, Nov. 15 leafdrop)	0.00	0.00	0.00
Beans (Apr. 1 plant date, Aug. 1 harvest)	0.00	0.00	0.00
Beans (May 1 plant date, Aug. 15 harvest)	0.00	0.00	0.00
Beans (Jun. 1 plant date, Sep. 15 harvest)	0.00	0.00	0.00
Citrus (year round)	0.65	0.65	0.65
Corn (Apr. 15 plant date, Sep. 15 harvest)	0.00	0.00	0.00
Cotton (Apr. 1 plant date, Sep. 20 defoliate)	0.00	0.00	0.00
Cotton (Apr. 15 plant date, Oct. 1 defoliate)	0.00	0.00	0.00
Cotton (May 1 plant date, Oct. 1 defoliate)	0.00	0.00	0.00
Wheat, Oats, Barley (Dec. 1 plant date, Jun. 1 harvest)	0.58	0.51	0.66
Grapes, Raisin (Mar. 15 leafout, Oct. 15 leafdrop)	0.00	0.00	0.00
Grapes, Table (Mar. 15 leafout, Oct. 15 leafdrop)	0.00	0.00	0.00
Kiwi (Mar. 15 leafout, Nov. 1 leafdrop)	0.00	0.00	0.00
Melons (Apr. 1 plant date, Jul. 15 harvest)	0.00	0.00	0.00
Melons (May 1 plant date, Aug. 15 harvest)	0.00	0.00	0.00
Melons (Jun. 1 plant date, Sep. 20 harvest)	0.00	0.00	0.00
Melons (Jul. 1 plant date, Oct. 10 harvest)	0.00	0.00	0.00
Olives (year round)	0.75	0.75	0.75
Pasture Grass	0.61	0.60	0.62
Pistachio (Apr. 1 leafout, Nov. 15 leafdrop)	0.00	0.00	0.00
Safflower (Mar. 1 plant date, Aug. 1 harvest)	0.00	0.00	0.00
Low Chilling Stone Fruit (Feb. 15 leafout, Dec. 1 leafdrop)	0.00	0.00	0.00
Stone Fruit (Mar.1 leafout, Nov. 15 leafdrop)			
[Peach, Nectarine, Plum, Apricot]	0.00	0.00	0.00
Late Stone Fruit (Mar. 16 leafout, Nov. 1 leafdrop)	0.00	0.00	0.00
Soft Fruit (Apr. 1 leafout, Nov. 15 leafdrop)			
[Apple, Pear]	0.00	0.00	0.00
Tomato (Mar. 1 plant date, Jul. 20 harvest)	0.00	0.00	0.00
Tomato (Apr. 1 plant date, July 30 harvest)	0.00	0.00	0.00
Walnut, Early (Mar. 15 leafout, Nov. 1 leafdrop)	0.00	0.00	0.00
Walnut, Late (Apr. 1 leafout, Nov. 1 leafdrop)	0.00	0.00	0.00

NOTE: *This information is a reproduction of information compiled by Kings River Conservation District. This information is provided as a general guideline and may not exactly be reflective of all locations or varieties.*

Agricultural Water Use

AGRICULTURAL WATER USE

California's unique geography and Mediterranean climate have allowed the State to become one of the most productive agricultural regions in the world. The Sierra Nevada Mountain range that lines the eastern edge of the State capture and store winter precipitation that can be then used for summer irrigation in the Central Valley. This water, combined with the Mediterranean climate permits the growing of a great number of crops. California produces over 250 different crops and leads the nation in production of 75 commodities. California is the sole producer of 12 different commodities including almonds, artichokes, dates, figs, raisins, kiwifruit, olives, persimmons, pistachios, prunes and walnuts.

Most of this production would not be possible without irrigation. In average year California agriculture irrigates 9.6 million acres using roughly 34 million acre-feet of water of the 43 million acre-feet diverted from surface waters or pumped from groundwater.

California's population growth and greater awareness of environmental water requirements has increased the pressure on California agriculture to use water more efficiently and to make more water available for urban and environmental uses. Decreasing agricultural water use is difficult for several reasons. First, California agricultural water use when considered on a broad regional scale, for the most part, is very efficient. Individual fields and farms in some regions may have low efficiencies, but water that is not used on one farm or field is often used on a nearby farm or field. Secondly, for most crops, production and yield is directly related to crop water use. A decrease in applied water will often directly decrease yield. The key is management strategies that improve water use efficiency without decreasing yield.

There are technologies and management strategies available that conserve water while maintaining yield and production standards. These technologies and management strategies like improved irrigation scheduling and crop specific irrigation management often not only conserve water, but also save energy and decrease grower's costs.

Below is a list of commonly used agricultural water conservation methods for both on-farm and district level implementation.

ON FARM WATER CONSERVATION METHODS

Irrigation Scheduling
Deciding when and how much water to apply to a field has a significant impact on the total amount of water used by the crop water use efficiency and irrigation efficiency. A number of different scheduling systems have been developed that can use either soil- plant or atmosphere-based measurements to determine when to irrigate. Using a more scientific approach to scheduling has generally been shown to decrease the amount of water applied while improving yield.

Tailwater Return Systems
To provide adequate water to the low end of the field, surface irrigation requires that a certain amount of water be spilled or drained off as tailwater. Tailwater return systems catch this runoff and pump the water back to the top of the field for reuse.

Irrigation System Improvements
Irrigation system improvement involves modifying the irrigation method or use of hardware and software to properly apply water to the field while minimizing water losses. For example improved furrows, combination of furrow and sprinkler, and changing from surface irrigation (flood, furrow and border check) to pressurized systems. Changing from surface irrigation to pressurized systems (sprinkler, drip, microirrigation) generally increases irrigation distribution uniformity and decreases applied water, although with certain soil types and applications, surface irrigation can be very efficient. In California there has been a trend to shift from surface irrigation to pressurized systems.

IRRIGATION DISTRICT SYSTEM IMPROVEMENTS

Canal Lining
Lining canals with high seepage rates can result in significant water savings. This is especially important where the groundwater is saline and the water cannot be reused without desalination.

Canal Structure Improvements
Replacing or improving canal structures can improve an irrigation district's ability to manage and control water in the district and reducing spillage.

Remote Monitoring and Control
Many irrigation districts are installing remote monitoring and in some cases remote control systems such as Supervisory Control and Data Acquisition Systems (SCADA). Remote control systems allow district to measure flow or water depth and allows the district to remotely operate hydraulic structures or devices. Remote monitoring and control systems allow districts to improve water management and control.

2

Soil and Water Management >

Water Conservation

Save water! Find information about how to save water through the wise development, control, protection, management and use of water resources.

WaterWise Gardening

Oregon State University. Cooperative Extension Service.

A selection of online courses, publications, and plant profiles for water efficient landscaping. Primarily for Oregon state residents, but of use to all.

Water Conservation

USDA. NAL. Water Quality Information Center.

A collection of bibliographies and links to information about water conservation as related to agriculture.

Water Quality, Conservation, Drought and Irrigation

National Center for Appropriate Technology. ATTRA - National Sustainable Agriculture Information Service.

Publications and other resources on water use, soil moisture management, water quality and water conservation including the publication Measuring and Conserving Irrigation Water.

Smart Water Use on Your Farm or Ranch

USDA. Sustainable Agriculture Research and Education.

A bulletin available for purchase and online access on the topic of successful water management systems for farmers and ranchers.

WaterSense

Environmental Protection Agency.

Provides information about water use efficiency and the WaterSense product labeling program for homeowners and businesses including irrigation technology.

Water Conservation

USDA. Natural Resources Conservation Service.

A fact sheet covering drought tolerant plants and efficient irrigation systems for residential and farm applications.

Water Conservation Field Services Program

Department of the Interior. Bureau of Reclamation.

Information about planning and technical assistance, new technologies, educational programs, publications, local contacts for the Western United States, a glossary and other links. Other special interest is Achieving Efficient Water Management: A Guidebook for Preparing Agricultural Water Conservation Plans (2.3 MB | PDF).

Soil and Water Conservation in Semi-Arid Areas

Food and Agriculture Organization of the United Nations. Land and Water Development Division.

This report covers soil conservation, water conservation principles and methods, water harvesting and use, applications for water conservation and similar topics for semi-arid lands.

Give Us Your Feedback

Last Modified: Feb-09-2016

3

AGRICULTURAL CONSERVATION

As the single largest water-consuming industry, agriculture has become a focal point for efforts to promote water conservation. The drive for water use efficiency has become institutionalized in agriculture through numerous federal, state and local programs. Since the 1980s, some water districts serving agricultural areas have developed extensive water conservation programs to help their customers (From Aquapedia).

AQUAFORNIA NEWS | WESTERN WATER MAGAZINE | PUBLICATIONS | VIDEOS | WESTERN WATER EXCERPTS | MAPS & POSTERS | AQUAPEDIA BACKGROUND

August 31, 2015 | Los Angeles Times

Sonoma County residents' battle with wineries is about more than water

> These days, the redwood-shaded creek by Laura and Ray Waldbaum's house is a bone-dry path of rocks and gravel, its occasional stagnant pools a somber reminder of the salmon that once thrived there.

July 30, 2015 | Sacramento Business Journal

Farmers, fighting back, say they're unfairly blamed for worsening drought

> California's agricultural industry this week returned fire with a PR campaign that seeks to emphasize strides in conservation made by farmers in recent years.

July 29, 2015 | NPR

Squeezed by drought, California farmers switch to less thirsty crops (with audio)

> Water scarcity is driving California farmers to plant different crops. Growers are switching to more profitable, less-thirsty fruits, vegetables and nuts.

July 17, 2015 | Associated Press

Ranchers sue over rule giving Feds authority on state water

4

Ranchers in New Mexico, California and Washington state have challenged a new Obama administration rule giving federal agencies authority to protect some streams and wetlands.

July 7, 2015 | Capital Public Radio

Apps help farmers with efficiency during the drought (with audio)

As the drought continues and the weather heats up, California farmers are grappling with how to allocate dwindling water supplies.

April 6, 2015 | Associated Press

Jerry Brown defends drought order that doesn't limit farmers

Gov. Jerry Brown on Sunday defended his order requiring Californians statewide to cut back on their water use in a historic mandate that spares those who consume the most – farmers.

February 16, 2015 | The Modesto Bee

Oakdale Irrigation District considers water exports, filling board vacancy

The [Oakdale] irrigation board on Tuesday could begin approving deals with farmers willing to idle their land and sell the water that would have been used there.

February 12, 2015 | The Fresno Bee

Tulare's World Ag Expo, Day 2: Water conservation for sale

In this new data-driven age, sensors are used to determine how much water a plant or tree needs or if the right amount of nutrients are being applied. Weather data is also available to give growers real-time information.

February 4, 2015 | Capital Public Radio

Conservation, efficiency and environment part of this year's Colusa Farm Show (with audio)

The most popular new technology? Drip tape.

January 30, 2015 | Capital Public Radio

5

Sonoma County vinters commit to sustainability (with audio)

Farms were assessed on more than 100 criteria including energy efficiency, drip irrigation and pest management.

January 23, 2015 | Monterey County Herald

EcoFarm kicks off 35th year with climate change talk

EcoFarm, the premier organic and sustainable agriculture gathering in the West, is jam-packed with talks related to lack of water over its four days.

November 10, 2014 | Santa Cruz Sentinel

Midwestern journalist sees convergence of tech, food

Last month, I packed up my household vegetable garden in Fargo, N.D., about 2,000 miles to the northeast of California's Central Coast. ... I'd visited Salinas this summer, as an agricultural journalist among a tour group of writers and bloggers.

October 21, 2014 | The Modesto Bee

SSJID wins global award for farm water conservation

Irrigation experts from around the world think highly of a water-saving project on Ripon-area farmland. The International Commission on Irrigation and Drainage, meeting last month in Gwangju, South Korea, presented its annual WatSave Technology Award to the South San Joaquin Irrigation District.

October 16, 2014 | The Sacramento Bee

Commentary: Mendocino Wine Co. saves water, earns raves

In his first career, Tim Thornhill stuck about 4,000 tensiometers – instruments that measure soil moisture and thereby help regulate irrigation – into the earth as he developed botanical gardens around the country.

October 1, 2014 | Water | Food | Environment — The Blog of David Guy

Blog: Thinking about the future of farming

On the heels of a successful Farm to Fork weekend in Sacramento, we have another opportunity to think about the future of farming. In the Sacramento Valley, the farmers are not only producing a commodity in the traditional economic sense, they are also the leading conservationists in the region, developing innovative 21st century projects and programs that will benefit salmon, migratory waterfowl and other birds, flood protection, as well as provide the pastoral settings that urbanites are craving in our increasingly frantic and busy environment we live.

6

KAWEAH BASIN
WATER QUALITY ASSOCIATION

Winter 2015 • Volume 1, Issue 1

NEWSLETTER

IRRIGATED LANDS REGULATORY PROGRAM UPDATES

Introduction

This newsletter is provided to all 2014 members of the Kaweah Basin Water Quality Association **(KBWQA)**, which covers the Kaweah Basin watershed portion of northern Tulare County.

The State of California Central Valley Regional Water Quality Control Board's **(Water Board)** General Order for the Irrigated Lands Regulatory Program **(ILRP)**, which was adopted on September 19, 2013, requires enrollment of all irrigated lands that produce commercial crops. Your annual membership with the KBWQA provides enrollment compliance with the ILRP General Order. The KBWQA is the intermediary third-party coalition, representing the interests of the grower member to provide compliance with the ILRP General Order and is not affiliated with any state agency.

2014 Initial Membership Enrollment Summary

A significant level of effort was needed to notify, educate and sign-up growers by the state-mandated August 6, 2014 deadline. The first grower membership sign-up for the KBWQA resulted in a vast majority of parcels complying within the deadline. A summary (as of September 2014) is provided in the table below.

Date KBWQA Established	October 3, 2013
Member ILRP Sign-up Due Date	August 6, 2014
Number of Members	1,302
Number of Large Farm Members (>=60 ac)	496
Number of Small Farm Members (<60 ac)	806
Number of Parcels Enrolled	4,880
Acres Enrolled	162,748

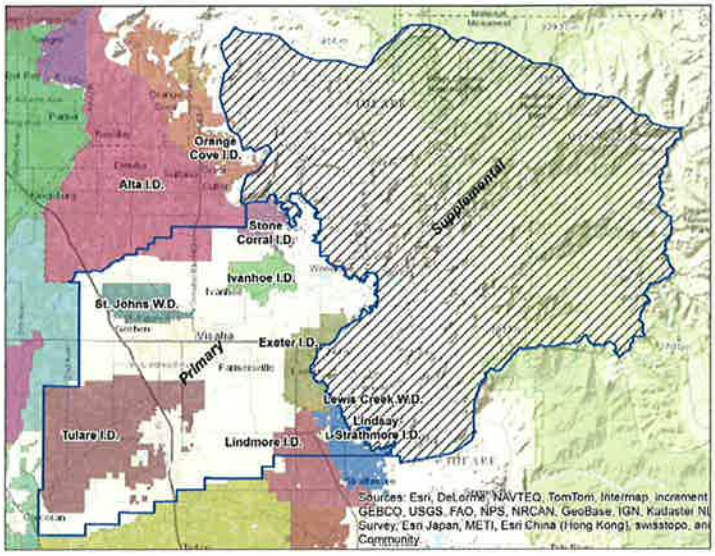

Kaweah Basin Water Quality Association Boundary Map

The KBWQA continues to receive post-deadline membership applications, but these applications must also be approved by the Water Board through a Notice of Intent process and pay a late fee. In fairness, a grower who joins late will pay more (KBWQA 2014 fees plus late fees) than the 1,300+ members who joined on time and are in good standing.

- If you know of growers within the KBWQA who have not signed up, please direct them to our website at www.kaweahbasin.org or provide them our KBWQA contact information.
- If you (as an existing member) have additional parcels that need to be registered, please contact the KBWQA as soon as possible.

Water Board Begins Field Inspections of Farm Parcels

The KBWQA has been informed that the Water Board has begun field inspecting farm parcels which were not enrolled with the KBWQA. The Water Board will be issuing Notice of Violations **(NOV)** to the owners of these parcels as the next

step prior to issuing potential fines. Please be aware that a NOV is public information and your name and farm information would be available from the state.

- **If you (as a member of the KBWQA) receive an NOV letter from the Water Board, please contact us immediately so the parcel(s) can be properly enrolled and the NOV can be dismissed.**
- If you have parcels within the KBWQA that you did not include with your 2014 sign-up, then please contact us immediately to avoid receiving a NOV letter.
- If you enrolled all your parcels within the KBWQA in 2014, then you are in compliance with enrollment and no action is required, you should not receive an NOV letter.
- **Payment of your 2015 assessment will retain your enrollment status through December 31, 2015.**

Water Board Fines Growers Who Did Not Sign-Up

On December 5, 2014 the Water Board issued fines for two growers in Madera and Merced Counties who received multiple certified Notice of Violation letters and Administrative Civil Liability (penalty) letters for not enrolling with their coalition or securing individual coverage. **One of these growers with 108 acres was fined $32,032 for not complying!** Detailed public information of this fine can be found on the Water Board website: http://www.waterboards.ca.gov/centralvalley/board_decisions/tentative_orders/1412/index.shtml#24.

The KBWQA's primary mission is to assist our members for compliance with the ILRP General Order. We do not want KBWQA growers to receive fines from the state.

2015 Membership Assessment approved

At the KBWQA Board of Director's November meeting, the 2015 (from January 1 through December 31) membership assessment was approved. The irrigated acres fee and the program management fee were both reduced from 2014. Membership fees are developed each year from a budget based on a detailed cost analysis of the General Order requirements. There are significant costs for the preparation of the required technical reports and monitoring. All funds remaining at the end of the year are carried over into the next fiscal year to either alleviate assessment fees or provide for future groundwater monitoring.

We understand that membership fees for regulatory compliance are a concern amongst KBWQA members. Our main purpose is to provide you with cost-effective compliance with the Water Board's ILRP General Order requirements. We will continue to work diligently to represent the members of the KBWQA, and will do our best to keep the fees as minimal as possible as the program moves forward with the implementation of these new water quality requirements.

2015 Assessment		Notes
Irrigated Acre Fee	$7.20/acre	Lower than 2014
Program Management Fee	$50/member	Reduced from $100 in 2014
Invoices Mailed	December 12, 2014	You can pay early or by the deadline
Invoice Due	**February 13, 2015**	**A 25% late fee will apply after this date**
Membership Revocation	After February 27, 2015	In addition to the late fee, membership may be revoked

Groundwater Quality Assessment Report

The KBWQA is preparing the Groundwater Quality Assessment Report **(GAR)**, which is due to the Water Board on February 7, 2015. It is a significant effort to produce this technical report in a manner that is scientifically defendable, yet relevant to the needs of the KBWQA members. The primary goal of the GAR is to identify areas of high and low vulnerability due to potential groundwater degradation from nitrogen, pesticides, and salinity within the KBWQA's boundaries. The Water Board will approve the final GAR for the identified high and low vulnerability areas, which impacts the timelines for submittal of the Farm Evaluation and the Nitrogen Management Plan by growers. The GAR is also the baseline document to formulate the Management Practices Evaluation Program, the Groundwater Quality Trend Monitoring Program, the Management Practices Evaluation Workplan, and the Trend Monitoring Workplan. All of these documents ultimately will lead to groundwater monitoring (implementation estimated to begin in a couple years), which the KBWQA will work to make as cost effective as possible.

The GAR will identify areas of high and low vulnerability due to potential groundwater degradation from nitrogen, pesticides and salinity within the KBWQA's boundaries. Approval by the Water Board, will impact the timelines for the submittal of Farm Evaluations and Nitrogen Management Plans by growers.

- **A large majority of the KBWQA area is likely to be determined to be high vulnerability due to existing exceedances of nitrate and pesticides in our groundwater.**
- Members will be notified of their high or low vulnerability status.
- Members will then be required to complete their Farm Evaluation and Nitrogen Management Plan based on vulnerability and farm size. **Please see the newly updated Member Required Reports table on page 4.**

Sediment Discharge & Erosion Assessment Report

The KBWQA is preparing a Sediment Discharge and Erosion Assessment Report **(SDEAR)**, which is due on February 7, 2015. Once completed, the SDEAR will identify the areas within the KBWQA that are susceptible to erosion and the discharge of sediment that could impact water quality.

Erosion and sediment discharge from agricultural fields to surface waters can be caused by a number of factors including: soil erodibility, rainfall, slope, vegetative cover, and the presence/absence of best management practices.

- **A small portion of the KBWQA area is likely to be determined to be susceptible.**
- Impacted members will be notified of their status and will be required to prepare, with KBWQA assistance, a Sediment and Erosion Control Plan **(SECP)** likely due in 2016. Please see additional information in this newsletter regarding the SECP requirements.

KBWQA Surface Water Monitoring Program Update

The KBWQA's surface water monitoring program is to determine the quality of surface water bodies that can be affected by irrigation and/or storm runoff. Originally the effort was focused on identifying nitrates, but the program now samples for pathogens, metals, pesticides, and toxicity along with general water quality parameters.

Through the efforts of the previous surface water monitoring program (in effect for the past 10+ years under the Kaweah River Sub-watershed), the KBWQA has been successful in improving water quality with the reduction of exceedance parameters. Water quality issues found through monitoring efforts have led to the implementation of better management and operation practices. Future monitoring should continue to show improved water quality of the Kaweah Basin surface waters as Kaweah growers implement new and better practices to their operations.

Due to the drought, the surface water monitoring program has not triggered very many storm events for sampling. Past surface water monitoring results have showed that some sites have surface water quality issues. The 2014/15 rainfall season has begun with much needed storms to help alleviate the drought, however with these storms, sampling and monitoring efforts will be greater than those from recent years.

- Surface water monitoring will continue and future groundwater monitoring will be added in order to comply with the Water Board's ILRP requirements.
- Growers should implement practices which contain all irrigation waters on their property.
- Exceedances of water quality parameters linked to specific grower dischargers can lead to disciplinary actions by the Water Board.

Member Required Reports

After significant negotiations and effort, the KBWQA and other partnering Tulare Lake Basin ILRP coalitions (Kings, Tule and Kern) were granted the following changes to the Member Required Reports on December 4, 2014 by the Water Board:

- Farm Evaluations – The due date for high vulnerability farms of all sizes is extended one year to March 1, 2016.
- Sediment & Erosion Control Plans – No changes. KBWQA will notify, assist and provide a template to identified farms.

- Nitrogen Management Plans **(NMP)** – The due date for high vulnerability large farms is now 90 days after the Water Board provides an approved template to the KBWQA. The due date will likely be around the end of March 2015. Additionally, high vulnerability large farms are no longer required to certify their NMP until March 1, 2016.

Member Report	Vulnerability	Farm Size	Due Date	Notes
Farm Evaluations	High	All	1 March ~~2015~~ **2016**	Extended one year
	Low	Large (>= 60 ac)	1 March 2016	--
		Small (<60 ac)	1 March 2018	--
Sediment & Erosion Control Plans	All farms identified in the SDEAR	Large	180 days from approval of SDEAR	--
		Small	1 year from approval of SDEAR	--
Nitrogen Management Plans	High	Large	~~1 March 2015~~ **90 days after approved template to third-party**	No certification required in 2015. Certification required 1 March 2016 with Summary Report.
		Small	1 March 2017	Must be certified & Summary Report required
	Low	All	1 March 2017	Certification & Summary Report not required

Farm Evaluations – Management Practices to Protect Water Quality

Farm Evaluations will describe management practices implemented to protect surface water and groundwater quality. The Water Board is finalizing a template for KBWQA members to use. The purpose of the template is to collect consistent information across irrigated agricultural areas and commodities, while minimizing costs for growers to provide the information. Overall the evaluation will include four parts: a whole farm evaluation, field specific evaluation, irrigation well information, sediment and erosion control practices, and a farm map identifying the location of wells.

Farm Evaluations will collect consistent information across irrigated agricultural areas and commodities, and will include a whole farm evaluation, field-specific evaluation, irrigation well information, sediment and erosion control practices, and a farm map identifying the location of wells.

- As previously noted, the first Farm Evaluation due date has been extended one year to March 1, 2016.
- An approved Farm Evaluation template from the Water Board is forthcoming. Once we have the approved template, workshops will be scheduled to assist members in complying with the Farm Evaluation requirements.
- Completed Farm Evaluations must be submitted to the KBWQA but not to the Water Board, however members are required to keep an on-farm copy to be made available to the Water Board upon their request.

Sediment and Erosion Control Plans

Members identified in the SDEAR with the potential to cause erosion and discharge sediment that may degrade surface waters will need to prepare a SECP. The SECP will outline practices to be implemented to control erosion or sediment run-off from irrigation or storm events.

- The first SECPs for large farms identified in the SDEAR could be due as early as August 2015.
- The preparation of the SECP is limited to qualified SECP developers such as a professional civil engineer or professional geologist for example.

- The KBWQA is available to assist as necessary but it is expected that a majority of the costs to prepare a SECP will be borne by the member.
- More SECP details are forthcoming.

Nitrogen Management Plans

Groundwater nitrate levels in many areas of the KBWQA exceed drinking water standards.

- An approved NMP template from the Water Board is forthcoming. Once the NMP template is approved, grower workshops will be held.
- Expected to be due around the end of March 2015, these first NMPs are due only for high vulnerability area large farms. However this NMP does not have to be certified or submitted.
- Eventually, all members will be required to prepare and implement a NMP for planned nitrogen applications to their crops for the upcoming crop year.

Nitrogen Management Plans will be due in 2015 for high vulnerability area large farms. Eventually, all members will be required to prepare and implement a Nitrogen Management Plan for planned nitrogen applications to their crops for the upcoming crop year.

- Beginning March 1, 2016 NMPs for all farms in high vulnerability areas will need to be certified, which can be accomplished through: self certification by a member who attends a California Department of Food and Agriculture approved training program for nitrogen plan certification; self-certification through the National Resources Conservation Service **(NRCS)** or University of California Cooperative Extension; or from a specialist such as a professional soil scientist, agronomist, crop advisor, or NRCS Technical Service Provider certified in nutrient management.

MARK YOUR CALENDARS!!

SPECIAL MEMBERSHIP MEETING

Tuesday, January 20, 2014 • 4-5:30 p.m.
Visalia Elk's Lodge, 3100 West Main Street

As required by the General Order, each KBWQA member is required to participate in at least one outreach event per year, particularly if a member's parcel is designated in a high vulnerability area.

- All farms in high vulnerability areas will need to submit to the KBWQA an annual Nitrogen Management Summary Report of what was actually done the previous crop year; documenting removal of nitrogen via crop uptake and during harvest and how much is left on the field that could potentially contribute to surface and groundwater quality.
- By March 1, 2017 all farms in low vulnerability areas must prepare an NMP but do not need to certify the plans or provide summary reports to the KBWQA.
- Growers will need to update their NMP annually.

Special Membership Meeting Scheduled for January 20, 2015

A special membership meeting will be held for all KBWQA members:

Date	**Tuesday January 20, 2015**
Time	**4 p.m. to 5:30 p.m.**
Location	**Visalia Elks Lodge** 3100 West Main Street, Visalia, CA 93291
Draft Agenda	1. Introduction 2. 2015 Assessment and Budget 3. Surface Water Monitoring Program 4. Groundwater Quality Assessment Report 5. Sediment Discharge and Erosion Assessment Report 6. Member Requirements a. Farm Evaluation b. Sediment & Erosion Control Plans c. Nitrogen Management Plan 7. What Happens Next? 8. Q&A session

Why?	As required by the General Order, each member is required to participate in at least one outreach event per year, particularly if a member's parcel is designated in a high vulnerability area. Therefore, attendance will be taken for documentation purposes.
If You Can't Make the Meeting	• Additional member workshops and meetings are to be scheduled for 2015. • KBWQA will videotape the meeting and will load it onto our website. Members, who could not make the meeting, will be able to certify viewing of the video online, as participation in an outreach event.

Contact the KBWQA

For questions, concerns, or additional information, please feel free to contact the KBWQA at **(559) 302-1620**, email **admin@kaweahbasin.org**, or visit our website at **www.kaweahbasin.org**.

IRRIGATED LANDS REGULATORY
PROGRAM UPDATES
www.kaweahbasin.org

KAWEAH BASIN
WATER QUALITY ASSOCIATION
Post Office Box 2840 • Visalia, CA 93279

Lindmore Irrigation District

Home Page

Tuesday, February 9, 2016 11:16 AM

Wet winter generates hope for surface supply

Update February 2, 2016

Next Board meeting is scheduled for Monday, February 8 at 2:00 PM at the Distirct Office. District's rain gage shows over 11 inches of precipitation compared to full year annual average of 11 inches. Also, 2015 was 6.10 inches and 2014 was 4.44 inches.

Keep praying for rain

Lindmore Irrigation District
P.O. Box 908
315 E. Lindmore Avenue
Lindsay, CA 93247
(559)562-2534

Board President
A Leroy Spulher

Board Vice-President
John Arnold

Directors:
Division 1 - Ronnie Adam

Division 2 - Michael R. Brownfield

Division 3 - A. Leroy Spuhler

Division 4 - David DePaoli

Division 5 -John Arnold

General Manager
Michael D. Hagman

Secretary/Treasurer
Michael D. Hagman

Collector/Assessor
Marv Rowe

The Lindmore Irrigation District has been in existence since 1937.

The District is located in the east central portion of the San Joaquin Valley of California. The District receives water from Millerton Lake through Friant Dam and delivered to the District down the Friant-Kern Canal all facilities of the the Federal Central Valley Project.

The District delivers this water to about 1,000 meters to about 500 farmers on over 26,000 acres within the District boundaries.

The District is governed by five board members who give policy direction to a General Manager. The General Manager is tasked with managing the day to day affairs of the District and implementing the policies as directed by the governing body.

The District is a member of the Friant Water Authority/Friant Water Users' Authority who operates and maintains the Friant-Kern Canal for the Federal government. The District is also a member of the Friant Power Authority that owns, operates and maintains power facilities at Friant Dam.

Friant Dam and Friant-Kern Canal - For more information about these facilities or other Central Valley Project facilities click here.

13

Lindmore Irrigation District

Lindmore Irrigation District
P.O. Box 908
315 East Lindmore Avenue
Lindsay, CA 93247
Ph. 559.562.2534

Hours of Operation 7:00 a.m. to 4:00 p.m.
Monday through Friday

Saturday 7:00 a.m. to 9:00 a.m.

General Manager
mhagman@lindmoreid.com

Assessor/Collector
mrowe@lindmoreid.com

Dispatcher:
mrowe@lindmoreid.com

Members of:

- Friant Water Authority/Friant Water User's Authority @ www.friantwater.org
- Association of California Water Agencies @ ACWA.com
- Central Valley Project Water Association

HOW TO PETITION THE BOARD

DISTRICT MEMBERS HAVE THE RIGHT TO PETITION THE BOARD ON ALL ISSUES.

DISTRICT MEMBERS MAY SUBMIT COMMENTS BY MAILING COMMENTS TO THE POSTAL ADDRESS NOTED ABOVE, EMAIL THEM TO THE GENERAL MANAGER (CLICK LINK ABOVE), OR BY ATTENDING A BOARD MEETING/HEARING PERSONALLY AND ADDRESSING THE BOARD THERE.

THE BOARD IS OBLIGATED TO RESPOND TO THE PETITIONS OF ITS DISTRICT MEMBERS. THIS IS TYPICALLY DONE BY ACTION OR DISCUSSION AT BOARD MEETINGS AND ANNOTATED IN THE DISTRICTS MINUTES. HOWEVER DISTRICT MINUTES ARE GENERAL IN NATURE AND DONT NECESSARILY CAPTURE ALL THE DISCUSSION THAT MAY OCCUR ON ANY GIVEN TOPIC.

ADDITIONALLY THE BOARD MAY ADDRESS INDIVIDUAL GROWERS VIA MAIL, EMAIL OR PHONE CONTACT.

CONTACT THE GENERAL MANAGER IF YOU HAVE FURTHER QUESTIONS

Copyright 2016. Lindmore Irrigation District. All rights reserved.

Lindmore Irrigation District

Agendas, Minutes, Budgets and District News from the Board of Directors

Click here for a map of the District

Minutes:

Approved January 2015 - July 2015

Budget:

2013 Budget
2014 Budget
2015 Budget

Agenda

Next Board Meeting: September 8, 2015

Auditied Financial Statements

FY2010
FY2011
FY2012
FY2013
FY2014

BOARD NEWS:

Water Rate for WY2015:
The Board adopted the Water Year 2015 water rates and set it at $1,100 AF. Because the USBR has allocated no water from Millerton to the District, all water for WY2015 from the District is subscription water and must have been prepaid. For petitions to the Board about this policy, please see the **Contact Us** page on this website and scroll down to **"How To Petition the Board"** (it is in **red text**).

Allocation:
The Board will not set an allocation for WY2015 due to no allocation of Millerton supply. See the **Water Info** page on this website for more information.

Water Rules and Regulations:
The Board adopted the 2013 Rules and Regulations. See the **Water Info** page on this webiste and press the "Rules and Regulations" link for a .pdf version

Budget:
The Board passed the 2015 budget in December 2014. Press the **2015 Budget** link to the left to access a .pdf copy of the adopted budget.

A budget is passed every year around the end of a calendar year.

Copyright 2016. Lindmore Irrigation District. All rights reserved.

WEBSITE BUILDER

15

Lindmore Irrigation District

WINTER MAINTENANCE

2015 WATER DELIVERED TO DISTRICT MEMBERS WAS 1,649 AF

Question: How did the District come up with the 0 AF per acre allocation:

Answer: Water Year 2015 the USBR allocated no water to the District. Since we were not allocated water the District was not therefore obligated to allocate supply to the Growers. However, the District was able to purchase supply in the amount of 1,649 on a subscription basis at a cost of $1,100 AF.

Question: How much water did the District receive and distribtue in WY2015:

Answer: Lindmore Delivered 1,649 AF to Growers in 2015

2015 Water Allotment:

0.00 AF per Acre

~~~~~~~~~~~

ORDER WATER BY FAX

For faxing orders CLICK HERE print the form and fax filled out form to: 559-562-5642

~~~~~~~~~~~~~~~~~

ORDER WATER BY EMAIL

For email orders send email to:

waterorders@lindmoreid.com

In the email please type in Account Number, Inches, On Date and Off Date

Example: 123456, 2", 5/5 - 5/15 and leave your phone contact number on the email as well. Remember orders must be recieved by 9:00 AM the day before your water on date

~~~~~~~~~~~~~~~~~~~~~~~~~~~~~~~~~~

RULES, RATES, AND DUE DATES

CLICK HERE FOR A COPY OF THE DISTRICTS RULES AND REGULATIONS
CLICK HERE FOR A COPY OF THE DISTRICTS TRANSFER FORM

WY 2015 RATES = $1,100 AF

WY 2013 RATES:
Gravity Irrigation - $65 AF Pumped Irrigation - $75 AF
Gravity M&I - $95 AF Pumped M&I - $105 AF

Standby charge - $25 per Acre

Unpaid Water Penalty - 1.50% of unpaid balance
Unpaid Standby penalty - 10% of delinquent balance
Water Billing:

The District bills growers for water use on a monthly basis. Growers should receive a bill for water by the end of the first week of the month following deliveries. Payment for water billing is due by the 25th of the month following deliveries (example: August water deliveries are billed and invoices sent to growers are to be paid by the 25th of September). If the payment is not received by this date, the grower will be charged 1.50% as a late fee (example: $100 late bill would be charge $1.50). In addtion to this penalty, the grower will not be able to order water for any of their parcels until the delinquent bill and penalties are paid.

Standby Billing:

Landowners will receive a bill from the District sometime in early November. These bills are due in installments. One half is due by December 25th and the other half is due by June 25th. If a Standby is not paid by the due date, the District will assess a 10% charge on the delinquent balance. In addition, the grower will not be able to order water for any of their parcels until the delinquent bill and penalties are paid.

Unpaid Bills:

After one year all unpaid bills will be placed into lien against the property of the land associated with the unpaid bill.

Water Use and options:
All lands paying a standby will receive an allocaiton of water. Such water is to be used by that

16
~~~~~~~~~~~~~~~~~~~~~~~~~~~~~~~~~~

grower in prior to District water shutdown (typically by the Monday before Thanksgiving in each year). If the landowner is not able to use all their water allocation they may transfer it to another grower or to the District pool.

Transfers to Other Landowners: Landowners not in default, can transfer all or part of their water allocation to any grower in the District up to December 31.

Transfers to the District Pool: All landowners can transfer water to the District Water Pool by July 31

Copyright 2016, Lindmore Irrigation District. All rights reserved.

Lindmore Irrigation District

Conservation Education

NEW PAGE

Water Conservation Methods and Education

Coming soon - Learn about how growers are using science, education and modernized practices to conserve water in growing their crops

Copyright 2016. Lindmore Irrigation District. All rights reserved.

POWERED BY WEBSITE BUILDER

18

ATTACHMENT K
DISTRICT AGRICULTURAL WATER ORDER FORM
FIVE YEAR UPDATE
WATER MANAGEMENT PLAN
LINDMORE IRRIGATION DISTRICT

Lindmore Irrigation District Tele: (559) 562-2534

Fax to : (559) 562-5642 or e-mail to: waterorders@lindmoreid.com

Application for Water

Date Filed _____ Acct. No. _____

Owner _____

Meter No. _____

CUT - TO _____ INC. - TO _____

ON/OFF _____ Day _____ Date _____

CUT - TO _____ INC. - TO _____

ON/OFF _____ Day _____ Date _____

CUT - TO _____ INC. - TO _____

ON/OFF _____ Day _____ Date _____

Ordered By _____

Application for Water

Date Filed _____ Acct. No. _____

Owner _____

Meter No. _____

CUT - TO _____ INC. - TO _____

ON/OFF _____ Day _____ Date _____

CUT - TO _____ INC. - TO _____

ON/OFF _____ Day _____ Date _____

CUT - TO _____ INC. - TO _____

ON/OFF _____ Day _____ Date _____

Ordered By _____

Application for Water

Date Filed _____ Acct. No. _____

Owner _____

Meter No. _____

CUT - TO _____ INC. - TO _____

ON/OFF _____ Day _____ Date _____

CUT - TO _____ INC. - TO _____

ON/OFF _____ Day _____ Date _____

CUT - TO _____ INC. - TO _____

ON/OFF _____ Day _____ Date _____

Ordered By _____

Application for Water

Date Filed _____ Acct. No. _____

Owner _____

Meter No. _____

CUT - TO _____ INC. - TO _____

ON/OFF _____ Day _____ Date _____

CUT - TO _____ INC. - TO _____

ON/OFF _____ Day _____ Date _____

CUT - TO _____ INC. - TO _____

ON/OFF _____ Day _____ Date _____

Ordered By _____

ATTACHMENT L
DRAINAGE PROBLEM AREA REPORT
FIVE YEAR UPDATE
WATER MANAGEMENT PLAN
LINDMORE IRRIGATION DISTRICT

Attachment L is not applicable to the District.

ATTACHMENT 3 - AGRICULTURAL WATER MEASUREMENT REGULATION

California Code of Regulations
Title 23. Waters
Division 2. Department of Water Resources
Chapter 5.1. Water Conservation Act of 2009
Article 2. Agricultural Water Measurement

§597. Agricultural Water Measurement

Under the authority included under California Water Code §10608.48(i)(1), the Department of Water Resources (Department) is required to adopt regulations that provide for a range of options that agricultural water suppliers may use or implement to comply with the measurement requirements in paragraph (1) of subdivision (b) of §10608.48.

For reference, §10608.48(b) of the California Water Code states that:

> *Agricultural water suppliers shall implement all of the following critical efficient management practices:*
>
> *(1) Measure the volume of water delivered to customers with sufficient accuracy to comply with subdivision (a) of Section 531.10 and to implement paragraph (2).*
>
> *(2) Adopt a pricing structure for water customers based at least in part on quantity delivered.*

For further reference, §531.10(a) of the California Water Code requires that:

> *(a) An agricultural water supplier shall submit an annual report to the department that summarizes aggregated farm-gate delivery data, on a monthly or bi-monthly basis, using best professional practices.*

Notes:

(1) Paragraphs (1) and (2) of §10608.48(b) specify agricultural water suppliers' reporting of aggregated farm-gate water delivery and adopting a volumetric water pricing structure as the purposes of water measurement. However, this article only addresses developing a range of options for water measurement.

(2) Agricultural water suppliers reporting agricultural water deliveries measured under this article shall use the "Agricultural Aggregated Farm – Gate Delivery Reporting Format for Article 2" (Rev. 6-20-12), developed for this article and hereby incorporated by reference.

(3) The Department shall report on the availability of new commercially available water measurement technologies and impediments to implementation of this article when reporting to the Legislature the status of adopted Agricultural Water Management Plans in plan submittal years 2012, 2015 and every five years thereafter as required by California Water Code §10845. The Department shall also report the findings to the California Water Commission.

Note: Authority cited: Section 10608.48, Water Code. Reference: Sections 531.10, 10608.48 (b), 10608.48 (i), 10608.52 (b) and 10845 Water Code.

§597.1. Applicability

(a) An agricultural water supplier providing water to 25,000 irrigated acres or more, excluding acres that receive only recycled water, is subject to this article.

(b) A wholesale agricultural water supplier providing water to another agricultural water supplier (the receiving water supplier) for ultimate resale to customers is subject to this article at the location at which control of the water is transferred to the receiving water supplier. However, the wholesale agricultural water supplier is not required to measure the receiving agricultural water supplier's deliveries to its customers.

(c) A water supplier providing water to wildlife refuges or habitat lands where (1) the refuges or habitat lands are under a contractual relationship with the water supplier, and (2) the water supplier meets the irrigated acreage criteria of Water Code §10608.12(a), is subject to this article.

(d) An agricultural water supplier providing water to less than 10,000 irrigated acres, excluding acres that receive only recycled water, is not subject to this article.

(e) An agricultural water supplier providing water to 10,000 or more irrigated acres but less than 25,000 irrigated acres, excluding acres that receive only recycled water, is not subject to this article unless sufficient funding is provided specifically for that purpose, as stated under Water Code §10853.

(f) A canal authority or other entity that conveys or delivers water through facilities owned by a federal agency is not subject to this article.

(g) Pursuant to Water Code §10608.8(d), an agricultural water supplier "that is a party to the Quantification Settlement Agreement, as defined in subdivision (a) of Section 1 of Chapter 617 of the Statutes of 2002, during the period within which the Quantification Settlement Agreement remains in effect," is not subject to this article.

(h) Pursuant to Water Code §10608.12(a), the Department is not subject to this article.

Note: Authority cited: Section 10608.48, Water Code. Reference: Sections 10608.12 (a), 10608.48 (d), 10608.48 (f), 10828, and 10853 Water Code.

§597.2. Definitions

(a) For purposes of this article, the terms used are defined in this section.

(1) "Accuracy" means the measured volume relative to the actual volume, expressed as a percent. The percent shall be calculated as 100 x (measured value – actual value) / actual value, where "measured value" is the value indicated by the device or determined through calculations using a measured value by the device, such as flow rate, combined with a duration of flow, and "actual value" is the value as determined through laboratory, design or field testing protocols using best professional practices.

(2) "Agricultural water supplier," as defined in Water Code §10608.12(a), means a water supplier, either publicly or privately owned, providing water to 10,000 or more irrigated acres, excluding acres that receive only recycled water. "Agricultural water supplier" includes a supplier or contractor for water, regardless of the basis of right, which distributes or sells water for ultimate resale to customers. "Agricultural water supplier" does not include the Department.

(3) "Approved by an engineer" means a California-registered Professional Engineer has reviewed, signed and stamped the plans, design, testing, inspection, and/or documentation report for a measurement device as described in this article.

(4) "Best professional practices" means practices attaining to and maintaining accuracy of measurement and reporting devices and methods described in this article, such as operation and maintenance procedures and practices recommended by measurement device manufacturers, designers, and industry professionals.

(5) "Customer" means the purchaser of water from an agricultural water supplier who has a contractual arrangement with the agricultural water supplier for the service of conveying water to the customer delivery point.

(6) "Delivery point" means the location at which the agricultural water supplier transfers control of delivered water to a customer or group of customers. In most instances, the transfer of control occurs at the farm-gate, which is therefore, a delivery point.

(7) "Existing measurement device," means a measurement device that was installed in the field prior to the effective date of this article.

(8) "Farm-gate," as defined in Water Code §531(f), means the point at which water is delivered from the agricultural water supplier's distribution system to each of its customers.

(9) "Irrigated acres," for purposes of applicability of this article, is calculated as the average of the previous five-year acreage within the agricultural water supplier's service area that has received irrigation water from the agricultural water supplier.

(10) "Manufactured device" means a device that is manufactured by a commercial enterprise, often under exclusive legal rights of the manufacturer, for direct off-the-shelf purchase and installation. Such devices are capable of directly measuring flow rate, velocity, or accumulating the volume of water delivered, without the need for additional components that are built on-site or in-house.

(11) "Measurement device" means a device by which an agricultural water supplier determines the numeric value of flow rate, velocity or volume of the water passing a designated delivery point. A measurement device may be a manufactured device, on-site built device or in-house built device.

(12) "New or replacement measurement device" means a measurement device installed after the effective date of this article.

(13) "Recycled water" is defined in subdivision (n) of §13050 of the Water Code as water that, as a result of treatment of waste, is suitable for a direct beneficial use or a controlled use that would not otherwise occur, and is therefore considered a valuable resource.

(14) "Type of device" means a measurement device that is manufactured or built to perform similar functions. For example, rectangular, v-notch, and broad crested weirs are one type of device. Similarly, all submerged orifice gates are considered one type of device.

Note: Authority cited: Section 10608.48, Water Code. Reference: Sections 10608.12 (a), 10608.12 (m), 10608.48, and 10813 Water Code.

§597.3 Range of Options for Agricultural Water Measurement

An agricultural water supplier subject to this article shall measure surface water and groundwater that it delivers to its customers pursuant to the accuracy standards in this section. The supplier may choose any applicable single measurement option or combination of options listed in paragraphs (a) or (b) of this section. Measurement device accuracy and operation shall be certified, tested, inspected and/or analyzed as described in §597.4 of this article.

(a) Measurement Options at the Delivery Point or Farm-gate of a Single Customer

An agricultural water supplier shall measure water delivered at the delivery point or farm-gate of a single customer using one of the following measurement options. The stated numerical accuracy for each measurement option is for the volume delivered. If a device measures a value other than volume, for example, flow rate,

velocity or water elevation, the accuracy certification must incorporate the measurements or calculations required to convert the measured value to volume as described in §597.4(e).

(1) An existing measurement device shall be certified to be accurate to within ±12% by volume.

and,

(2) A new or replacement measurement device shall be certified to be accurate to within:

(A) ±5% by volume in the laboratory if using a laboratory certification;

(B) ±10% by volume in the field if using a non-laboratory certification.

(b) Measurement Options at a Location Upstream of the Delivery Points or Farm-gates of Multiple Customers

(1) An agricultural water supplier may measure water delivered at a location upstream of the delivery points or farm-gates of multiple customers using one of the measurement options described in §597.3(a) if the downstream individual customer's delivery points meet either of the following conditions:

(A) The agricultural water supplier does not have legal access to the delivery points of individual customers or group of customers needed to install, measure, maintain, operate, and monitor a measurement device.

Or,

(B) An engineer determines that, due to small differentials in water level or large fluctuations in flow rate or velocity that occur during the delivery season at a single farm-gate, accuracy standards of measurement options in §597.3(a) cannot be met by installing a measurement device or devices (manufactured or on-site built or in-house built devices with or without additional components such as gauging rod, water level control structure at the farm-gate, etc.). If conditions change such that the accuracy standards of measurement options in §597.3(a) at the farm-gate can be met, an agricultural water supplier shall include in its Agricultural Water Management Plan, a schedule, budget and finance plan to demonstrate progress to measure water at the farm-gate in compliance with §597.3(a) of this article.

(2) An agricultural water supplier choosing an option under paragraph (b)(1) of this section shall provide the following current documentation in its Agricultural Water Management Plan(s) submitted pursuant to Water Code §10826:

(A) When applicable, to demonstrate lack of legal access at delivery points of individual customers or group of customers downstream of the point of measurement, the agricultural water supplier's legal counsel shall certify to the Department that it does not have legal access to measure water at customers delivery points and that it has sought and been denied access from its customers to measure water at those points.

(B) When applicable, the agricultural water supplier shall document the water measurement device unavailability and that the water level or flow conditions described in §597.3(b)(1)(B) exist at individual customer's delivery points downstream of the point of measurement as approved by an engineer.

(C) The agricultural water supplier shall document all of the following criteria about the methodology it uses to apportion the volume of water delivered to the individual downstream customers:

(i) How it accounts for differences in water use among the individual customers based on but not limited to the duration of water delivery to the individual customers, annual customer water use patterns, irrigated acreage, crops planted, and on-farm irrigation system,

and;

(ii) That it is sufficient for establishing a pricing structure based at least in part on the volume delivered,

and;

(iii) That it was approved by the agricultural water supplier's governing board or body.

Note: Authority cited: Section 10608.48, Water Code. Reference: Sections 531.10, 10608.48 *(i)* (1), and 10826 Water Code.

§597.4 Accuracy Certification, Records Retention, Device Performance, and Reporting

(a) Initial Certification of Device Accuracy

The accuracy of an existing, new or replacement measurement device or type of device, as required in §597.3, shall be initially certified and documented as follows:

(1) For existing measurement devices, the device accuracy required in section 597.3(a) shall be initially certified and documented by either:

(A) Field-testing that is completed on a random and statistically representative sample of the existing measurement devices as described in §597.4(b)(1) and §597.4(b)(2). Field-testing shall be performed by individuals trained in the use of field-testing equipment, and documented in a report approved by an engineer.

Or,

(B) Field-inspections and analysis completed for every existing measurement device as described in §597.4(b)(3). Field-inspections and analysis shall be performed by trained individuals in the use of field inspection and analysis, and documented in a report approved by an engineer.

(2) For new or replacement measurement devices, the device accuracy required in sections 597.3 (a)(2) shall be initially certified and documented by either:

(A) Laboratory Certification prior to installation of a measurement device as documented by the manufacturer or an entity, institution or individual that tested the device following industry-established protocols such as the National Institute for Standards and Testing (NIST) traceability standards. Documentation shall include the manufacturer's literature or the results of laboratory testing of an individual device or type of device.

Or,

(B) Non-Laboratory Certification after the installation of a measurement device in the field, as documented by either:

(i) An affidavit approved by an engineer submitted to the agricultural water supplier of either (1) the design and installation of an individual device at a specified location, or (2) the standardized design and installation for a group of measurement devices for each type of device installed at specified locations.

Or,

(ii) A report submitted to the agricultural water supplier and approved by an engineer documenting the field-testing performed on the installed measurement device or type of device, by individuals trained in the use of field testing equipment.

(b) Protocols for Field-Testing and Field-Inspection and Analysis of Existing Devices

(1) Field-testing shall be performed for a sample of existing measurement devices according to manufacturer's recommendations or design specifications and following best professional practices. It is recommended that the sample size be no less than 10% of existing devices, with a minimum of 5, and not to exceed 100 individual devices for any particular device type. Alternatively, the supplier may develop its own sampling plan using an accepted statistical methodology.

(2) If during the field-testing of existing measurement devices, more than one quarter of the samples for any particular device type do not meet the criteria pursuant to §597.3(a), the agricultural water supplier shall provide in its Agricultural Water

Management Plan, a plan to test an additional 10% of its existing devices, with a minimum of 5, but not to exceed an additional 100 individual devices for the particular device type. This second round of field-testing and corrective actions shall be completed within three years of the initial field-testing.

(3) Field-inspections and analysis protocols shall be performed and the results shall be approved by an engineer for every existing measurement device to demonstrate that the design and installation standards used for the installation of existing measurement devices meet the accuracy standards of §597.3(a) and operation and maintenance protocols meet best professional practices.

(c) Records Retention

Records documenting compliance with the requirements in §597.3 and §597.4 shall be maintained by the agricultural water supplier for ten years or two Agricultural Water Management Plan cycles.

(d) Performance Requirements

(1) All measurement devices shall be correctly installed, maintained, operated, inspected, and monitored as described by the manufacturer, the laboratory or the registered Professional Engineer that has signed and stamped certification of the device, and pursuant to best professional practices.

(2) If an installed measurement device no longer meets the accuracy requirements of §597.3(a) based on either field-testing or field-inspections and analysis as defined in sections 597.4 (a) and (b) for either the initial accuracy certification or during operations and maintenance, then the agricultural water supplier shall take appropriate corrective action, including but not limited to, repair or replacement to achieve the requirements of this article.

(e) Reporting in Agricultural Water Management Plans

Agricultural water suppliers shall report the following information in their Agricultural Water Management Plan(s):

(1) Documentation as required to demonstrate compliance with §597.3 (b), as outlined in section §597.3(b)(2), and §597.4(b)(2).

(2) A description of best professional practices about, but not limited to, the (1) collection of water measurement data, (2) frequency of measurements, (3) method for determining irrigated acres, and (4) quality control and quality assurance procedures.

(3) If a water measurement device measures flow rate, velocity or water elevation, and does not report the total volume of water delivered, the agricultural water supplier must document in its Agricultural Water Management Plan how it converted the

measured value to volume. The protocols must follow best professional practices and include the following methods for determining volumetric deliveries:

(A) For devices that measure flow-rate, documentation shall describe protocols used to measure the duration of water delivery where volume is derived by the following formula: Volume = flow rate x duration of delivery.

(B) For devices that measure velocity only, the documentation shall describe protocols associated with the measurement of the cross-sectional area of flow and duration of water delivery, where volume is derived by the following formula: Volume = velocity x cross-section flow area x duration of delivery.

(C) For devices that measure water elevation at the device (e.g. flow over a weir or differential elevation on either side of a device), the documentation shall describe protocols associated with the measurement of elevation that was used to derive flow rate at the device. The documentation will also describe the method or formula used to derive volume from the measured elevation value(s).

(4) If an existing water measurement device is determined to be out of compliance with §597.3, and the agricultural water supplier is unable to bring it into compliance before submitting its Agricultural Water Management Plan in December 2012, the agricultural water supplier shall provide in its 2012 plan, a schedule, budget and finance plan for taking corrective action in three years or less.

Note: Authority cited: Section 10608.48, Water Code. Reference: Sections 531.10, 10608.48 *(i)* (1), and 10826 Water Code.

Agricultural Aggregated Farm-Gate[1] Delivery Reporting Format for Article 2

Due annually beginning no later than July 31, 2013 from agricultural water suppliers subject to Title 23, Division 2, Chapter 5.1, Article 2 of the CCR - Agricultural Water Measurement

1. Water Supplier Information

Name:

Address:

Phone Number:

Fax:

Total Number of Farm-Gates:

Number of Measured Farm-Gates:

Service Area Acreage:

2. Contact information

Name:

Title:

Address:

Phone Number:

Fax:

E-mail:

Submittal date:

3. Aggregated Farm-Gate Delivery Data[2]: (*provide monthly or bimonthly data, acre-feet*)

	Jul	Aug	Sep	Oct	Nov	Dec	Jan	Feb	Mar	Apr	May	Jun	Total
Monthly Deliveries													

	Jul-Aug	Sep-Oct	Nov-Dec	Jan-Feb	Mar-Apr	May-Jun	Total
Bimonthly Deliveries							

4. Explanations, Comments and Best Professional Practices[3]:

Note: An agricultural water supplier's total water use may be different from Aggregated Farm-Gate deliveries because measurement at these points may not account for other practices (such as groundwater recharge/conjunctive use, water transfers, wheeling to other agencies, urban use, etc).

1. “Farm-gate” means the point at which water is delivered from the agricultural water supplier’s distribution system to each of its individual customers as specified in the Agricultural Water Measurement Regulation (Title 23, Division 2, Chapter 5.1, Article 2 of the CCR).
2. “Aggregated farm-gate delivery data” means information reflecting the total volume of water an agricultural water supplier provides to its customers and is calculated by totaling its deliveries to customers.
3. "Best Professional Practices" is defined in Title 23, Division 2, Chapter 5.1, Article 2 of the CCR, Section 597.2.

ATTACHMENT 4 - DISTRICT'S METERS INSTALLATION TYPICAL DRAWINGS

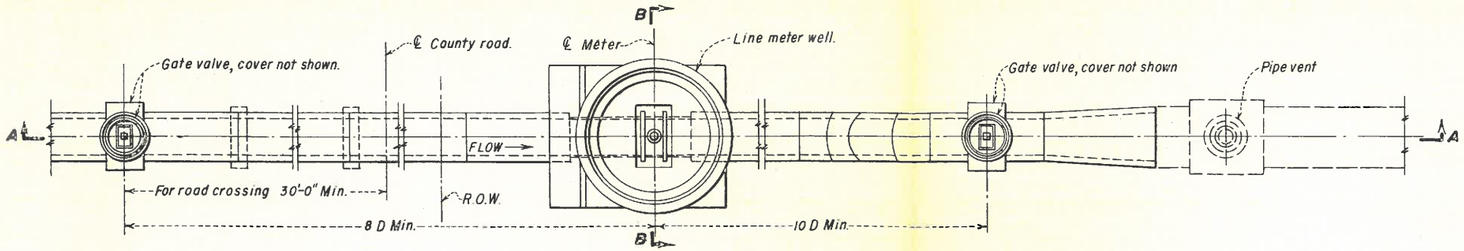

PLAN

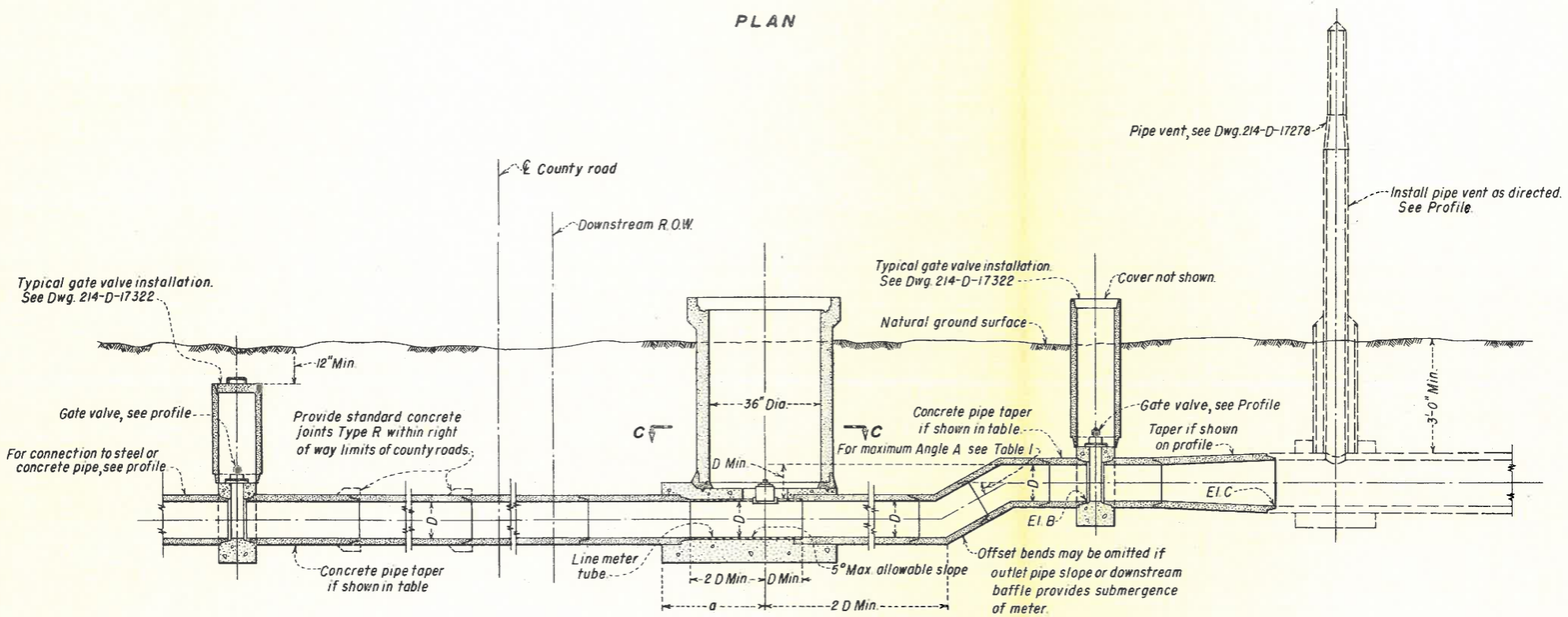

SECTION A-A

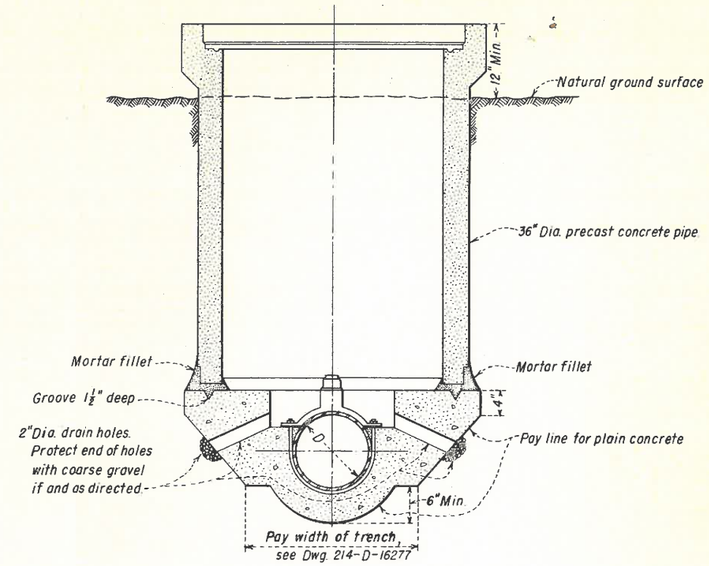

SECTION B-B

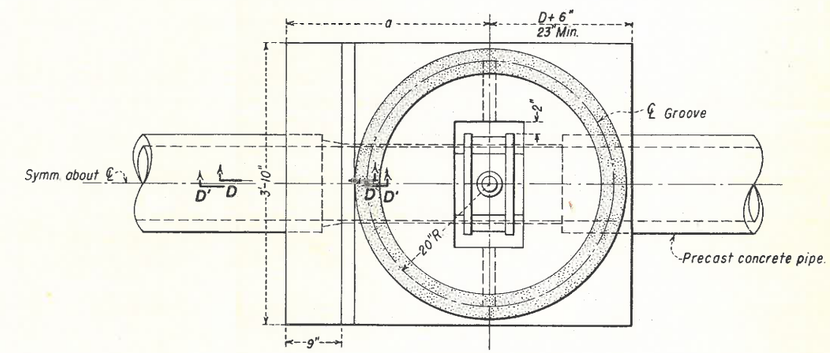

SECTION C-C

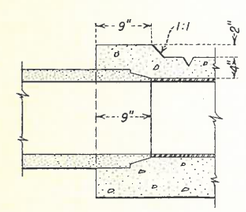

SECTION D-D
(12" AND 18" METERS)

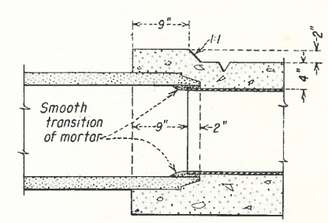

SECTION D'-D'
(14" AND 20" METERS)

NOTES

Precast tapers shown may be replaced by stepped pipe tapers (see Dwg. 214-D-16269) for heads to 50 feet.
Pipe vents below meters shall be installed at high point of line.
For elevations A, B and C, see profile.
For details of pipe installation at highway crossings, see profiles.

TABLE I

PIPE CLASSIFICATION	MAXIMUM ANGLE A
H25P	30°
H50P	30°
H75P	20°
H100P	12½°
H125P	10°

GATE VALVE DIAMETER	CONCRETE PIPE TAPER	D	METER DIAMETER D	a	CONCRETE PIPE TAPER	GATE VALVE DIAMETER
8"	None	12"	12"	2'-9"	None	8"
12"	None				None	12"
12"	12" to 15"	15"	14"	3'-3"	15" to 12"	12"
16"	None				None	16"
16"	15" to 18"	18"	18"	3'-9"	18" to 15"	16"
18"	None				None	18"
18"	18" to 21"	21"	20"	4'-3"	21" to 18"	18"
21"	None				None	21"

UNITED STATES
DEPARTMENT OF THE INTERIOR
BUREAU OF RECLAMATION
CENTRAL VALLEY PROJECT—CALIFORNIA
FRIANT-KERN CANAL DISTRIBUTION SYSTEM
LINDMORE IRRIGATION DISTRICT-UNIT 3

TYPICAL 12", 14", 18" AND 20" LINE METER WELL INSTALLATIONS TYPE D

DRAWN E.V.G. SUBMITTED
TRACED W.C.W. RECOMMENDED
CHECKED SUBMITTED - S.A.C. APPROVED
ACT. CHIEF DESIGNING ENGINEER
DENVER, COLORADO. JUNE 23, 1950

214-D-17258

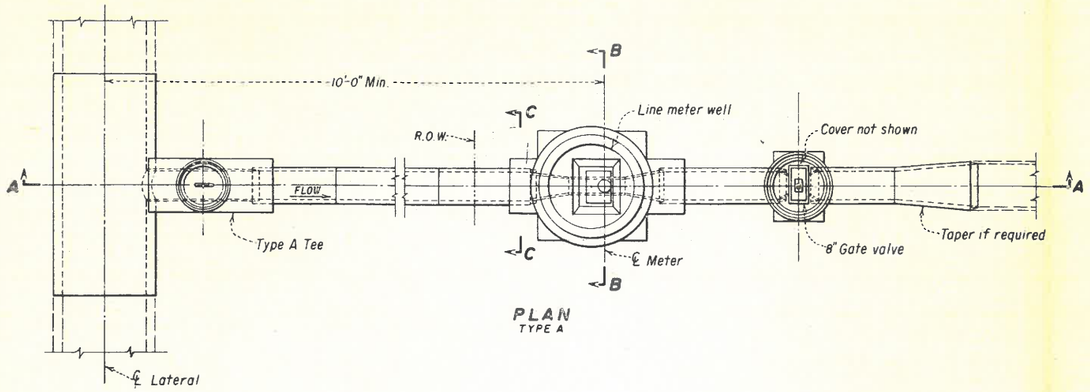

PLAN
TYPE A

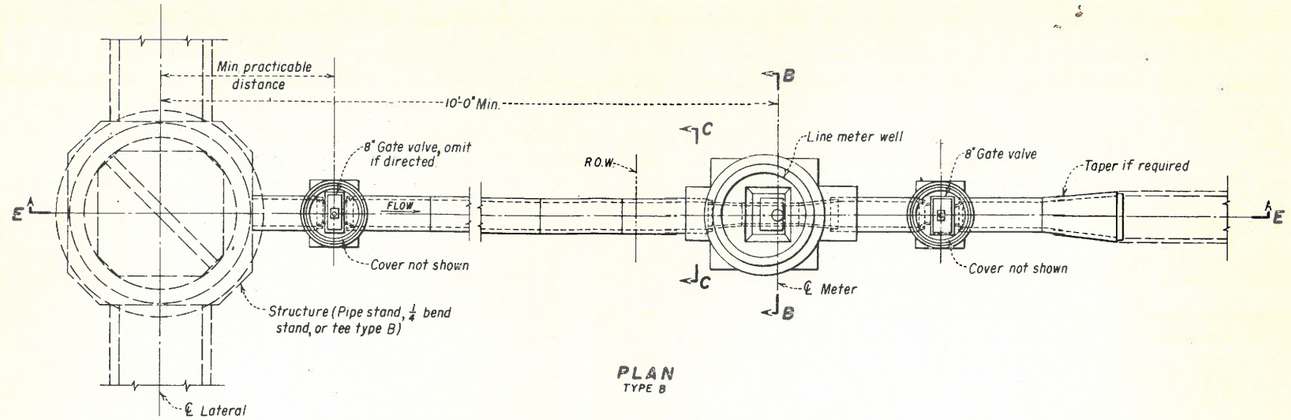

PLAN
TYPE B

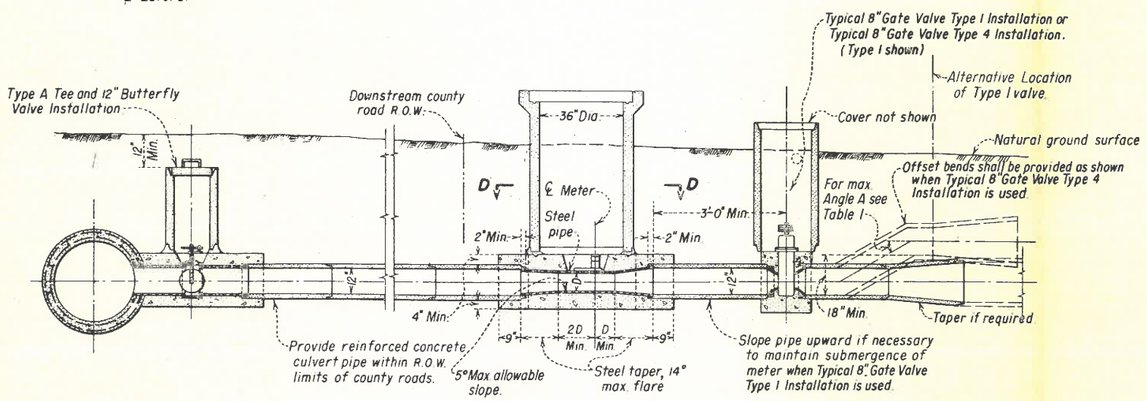

SECTION A-A

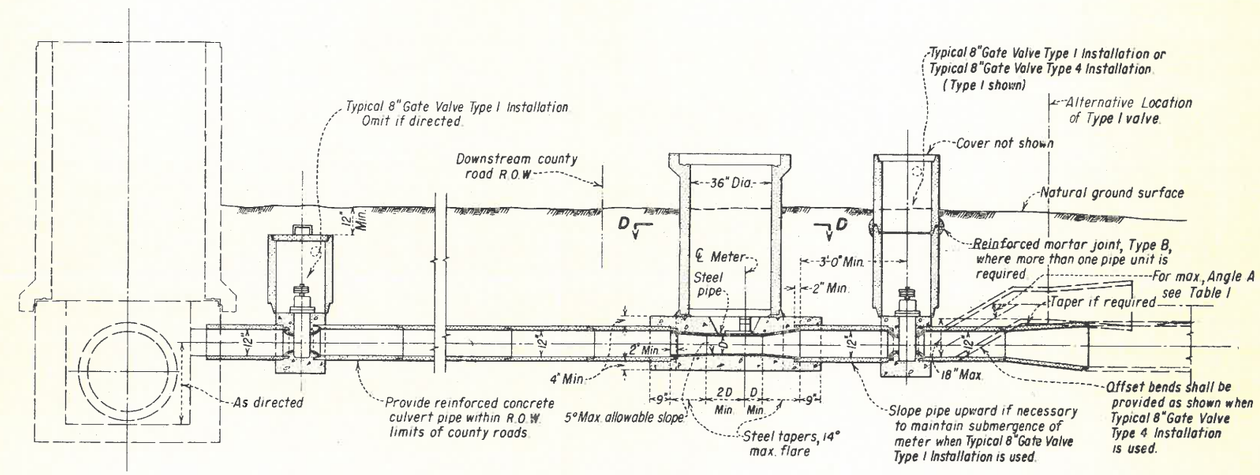

SECTION E-E

TABLE I

PIPE CLASSIFICATION	MAXIMUM ANGLE A
H25P	30°
H50P	30°
H75P	20°
H100P	12 1/2°
H125P	10°

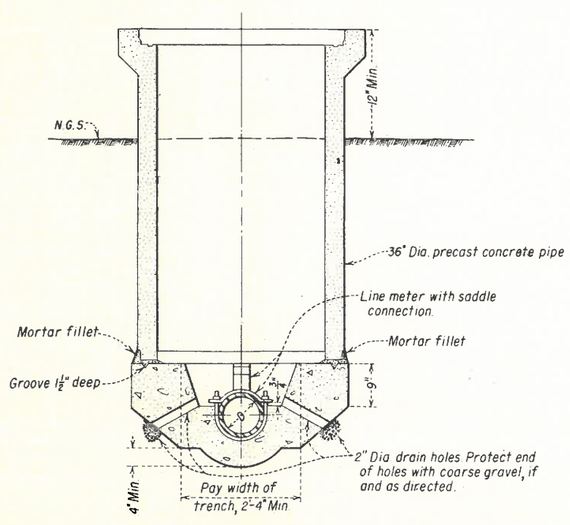

SECTION B-B

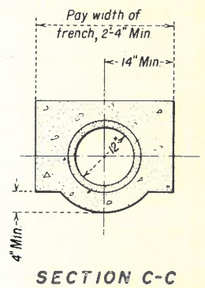

SECTION C-C

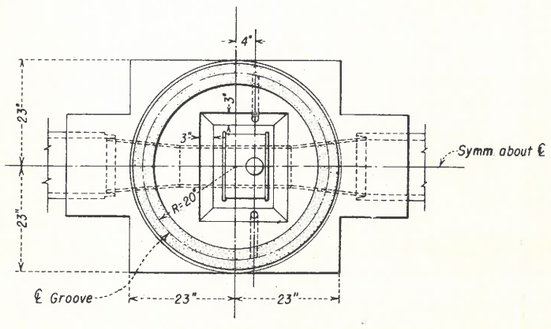

SECTION D-D

NOTES

Precast tapers may be replaced by stepped pipe tapers as shown on Dwg. 214-D-16269 for heads to 50 feet.
For details of pipe installation at highway crossings, see profiles.
For typical delivery installations, see Dwgs. 214-D-17264 and 214-D-17265.
For Typical 8" Gate Valve Installation, see Dwg. 214-D-17322.
For Typical 8" Gate Valve Type 4 Installation, see Dwg. 214-D-17256.

UNITED STATES
DEPARTMENT OF THE INTERIOR
BUREAU OF RECLAMATION
CENTRAL VALLEY PROJECT-CALIFORNIA
FRIANT-KERN CANAL DISTRIBUTION SYSTEMS
LINDMORE IRRIGATION DISTRICT-UNIT 3
TYPICAL 6", 8" AND 10" DIA. LINE METER WELL INSTALLATIONS

DRAWN J.R.S. SUBMITTED
TRACED J.A.F. RECOMMENDED
CHECKED APPROVED
ACT. CHIEF DESIGNING ENGINEER
DENVER, COLORADO JULY 7, 1960 214-D-17259

ATTACHMENT 5 - WATER METER MANUFACTURER'S SHEETS

AG2000
Irrigation Magmeter

ISO 9001:2008 CERTIFIED COMPANY

APPLICATIONS

- Irrigation
- Chemigation
- Agricultural automation
- Well usage monitoring
- Dairy Lagoons

FEATURES

- Simple as a mechanical meter
- No moving parts
- Minimal straight pipe required
- Battery power standard; External power optional
- Solar compatible
- Built-in rate & total indicator
- Built-in pulse output for data-logging or telemetry
- Tamper-evident seal

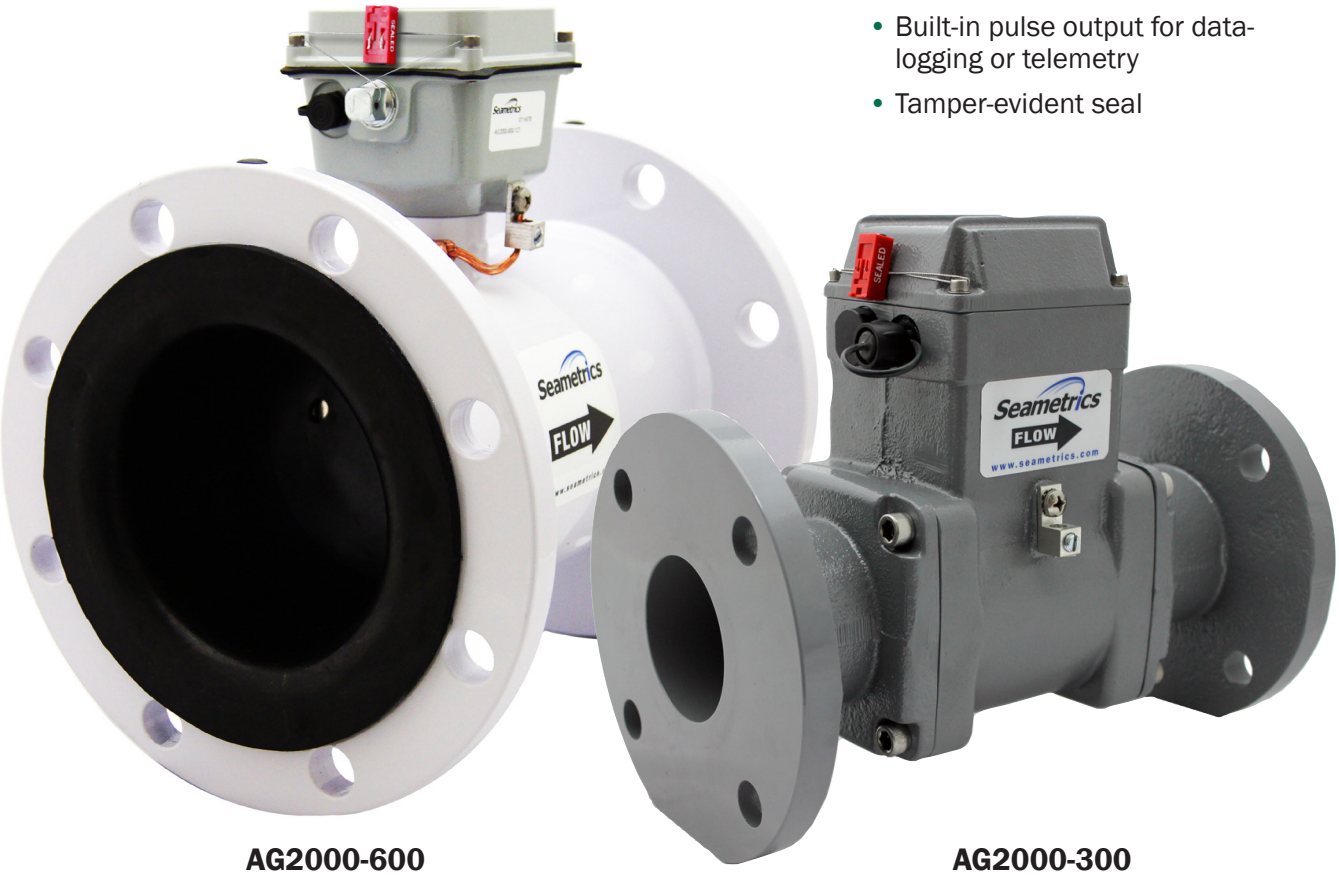

AG2000-600 AG2000-300

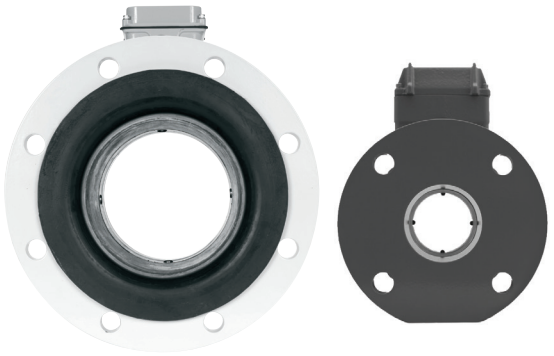

Unobstructed Flow

Seametrics' series of standard and IP68 (submersible) flanged magmeters.

Available in sizes from 3" up to 12".

AG2000
Irrigation Magmeter

GENERAL INFORMATION

The AG2000 is a spool-type electromagnetic flowmeter for use in irrigation applications in 3” to 12” pipe. With no moving parts, these meters provide unobstructed flow and are resistant to wear from debris found in ground or surface water. Little maintenance is required because there are no bearings to wear out or propellers to stop turning. Minimal straight pipe requirements allow AG2000 meters to be used in piping configurations where there is little space between the meter and an elbow.

The standard AG2000 is battery powered. Where an external power source is available, the AG2000 can be optionally converted to 8-32 Vdc, with the batteries then serving as back-up to maintain continuous operation in case of power failure. This configuration will prolong battery life indefinitely.

An IP68 version (-168 option) is available for burial or applications where the meter may be under water up to a depth of 3 meters for prolonged periods of time.

The meter comes with built-in pulse output (requires optional cable) for data logging or telemetry. Several pulse rates are available. An internal data logger is also available for secure flow logging (-127 option). A Seametrics FT415W or FT420W display can be added if remote rate/total reading is desired, or an AO55W if a (4-20 mA) analog signal is required. (High-frequency pulse rate is required for use with most Seametrics controllers.)

The AG2000 is secured with a seal wire to protect against unauthorized access. The seal can be broken by an authorized agent, to change units of measure, replace the battery pack, or to field-install an optional power/output cable. The cable can be factory or field-installed where external power is available and/or pulse output is needed. An accessory weather guard is available for additional protection in outdoor applications.

For chemigation applications, the chemical injection point must be placed downstream of the meter **OR** far enough upstream for **complete mixing** to occur before the flow reaches the meter. (See tech bulletin on Seametrics’ website, www.seametrics.com).

FEATURES

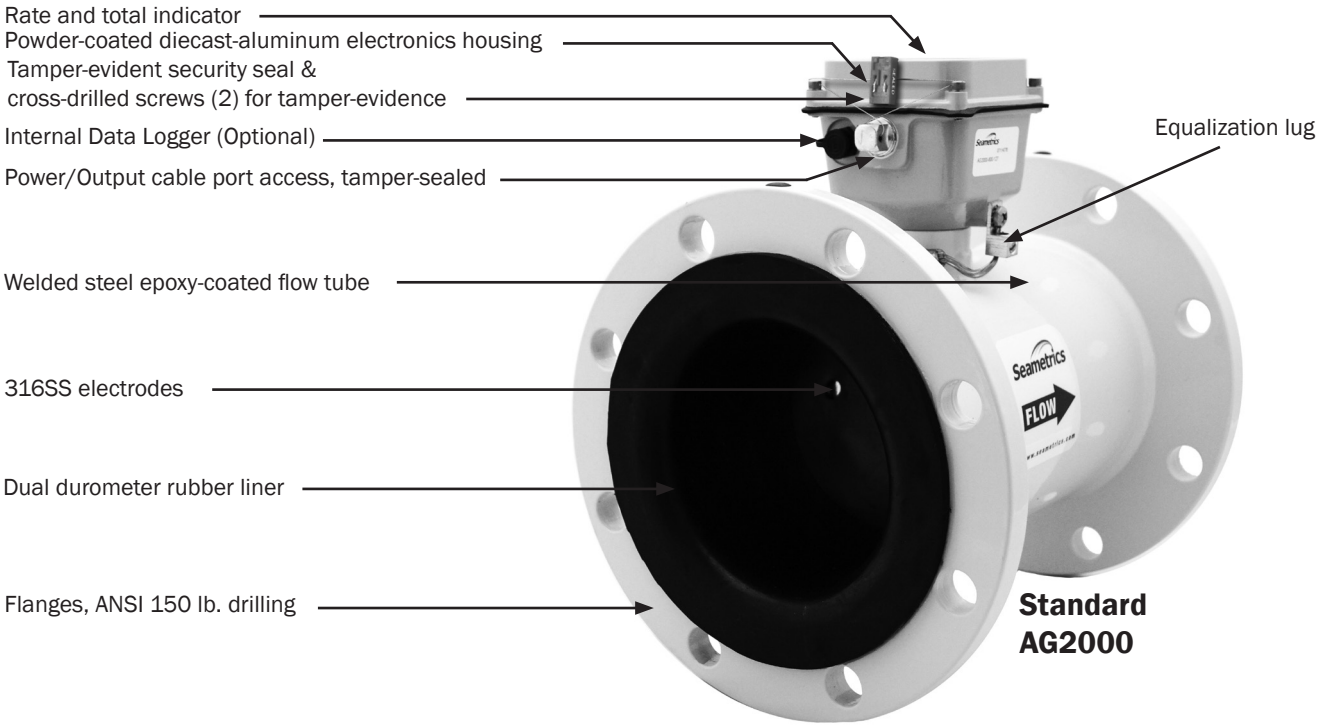

Standard AG2000

AG2000
Irrigation Magmeter

FEATURES Continued

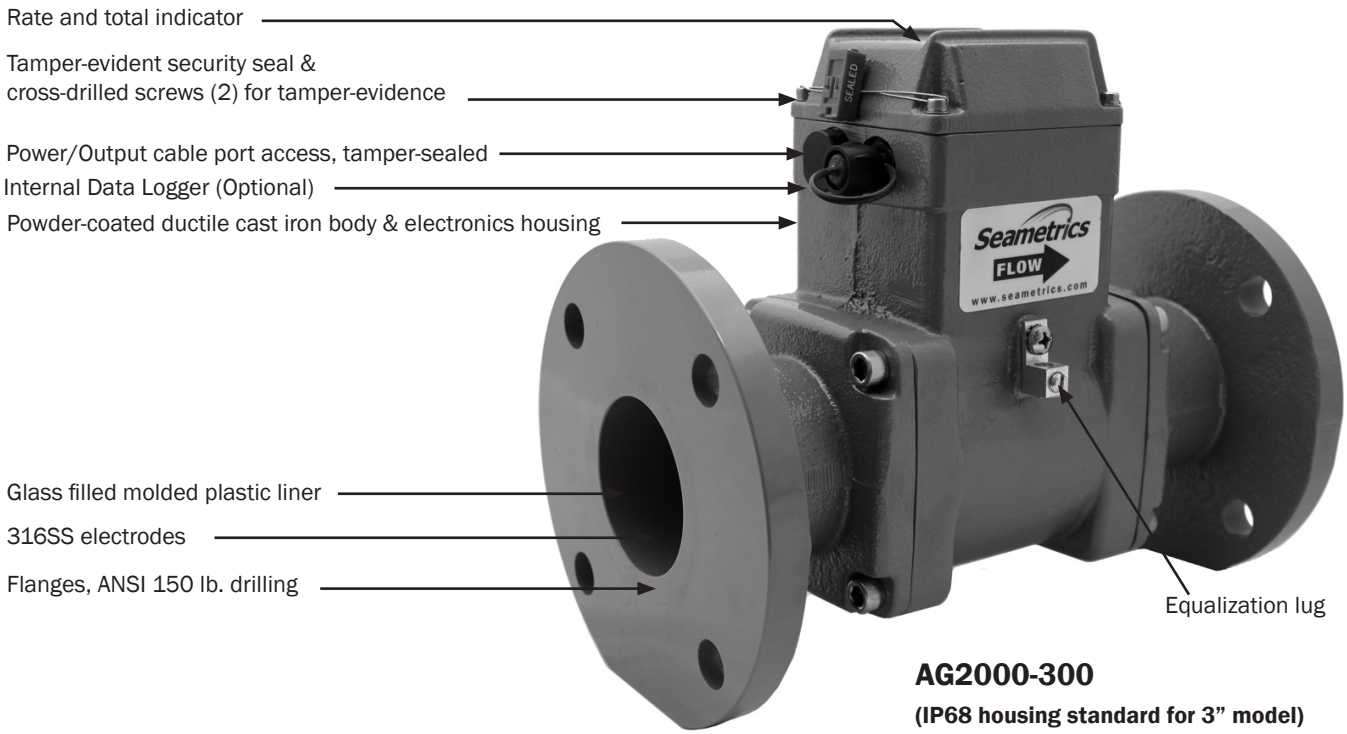

AG2000-300

(IP68 housing standard for 3” model)

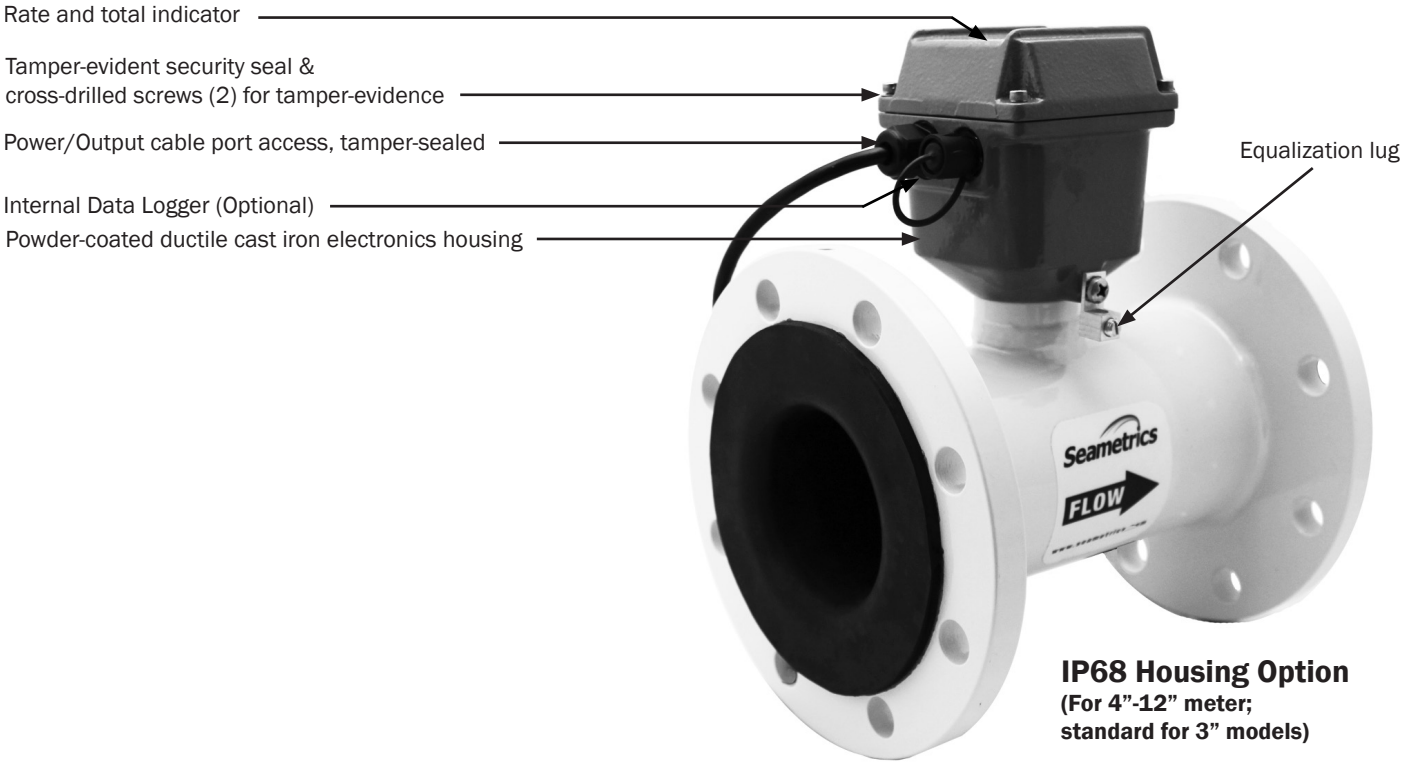

IP68 Housing Option

(For 4”-12” meter;
standard for 3” models)

AG2000
Irrigation Magmeter

SPECIFICATIONS*

Pipe Sizes		3”, 4”, 6”, 8”, 10”, 12”	
Fittings		ANSI 150 lb. drilling	
Pressure		150 psi (10.3 bar) working pressure	
Temperature	**Operating**	10˚ to 130˚ F (-12˚ to 54˚ C)	
	Non-Operating	-40˚ to 158˚ F (-40˚ to 70˚ C)	
Accuracy		+/- 1% of reading for flow between 10% to 100% of max flow	
		+/- 2% of reading for flow from cutoff to 10% of max flow	
Materials	**Body (3” Only)**	Ductile cast iron, powder coated w/NSF61 listed epoxy powder	
	Body (4”-12”)	Welded steel, epoxy-coated	
	Liner (3” Only)	Noryl®	
	Liner (4”-12”)	Santoprene/Polypropylene	
	Electronics Housing	Diecast aluminum, powder-coated (non-IP68)	Ductile Cast Iron (IP68)
	Electrodes	316 stainless steel	
	O-ring (3” Only)	EPDM	
Display		**Rate**	**Total**
	Digits	5	8
	Units	Gallon/Minute, Liter/Minute, Cubic Feet/Minute, Cubic Meter/Hour, Gallons/Sec, Liter/Second Cubic Feet/ Sec, Miner’s Inch, Cubic Meter/Min	Gallon, Gallon x 1000, Liter, Liter x 1000, Mega Liter, Cubic Meters, Cubic Meter x 1000, Acre Feet, Cubic Feet, Cubic Feet x 1000, Million Gallon, Miner’s Inch Day, Acre Inch
Power		1 battery pack that contains 2 Lithium 3.6V “D” batteries, replaceable. Standard battery life 2.5 years 5 years with extended battery life (EBL) option	
		With external power option (uses 8-32 Vdc, 30 mA), Lithium batteries serve as backup in power failure (10 year life)	
Pulse Output (with optional cable)			
	Signal	Current sinking pulse, opto-isolated, 30 Vdc at 10 mA max	
	Pulse Rates	High Frequency; 10 units/pulse; 100 units/pulse; 1000 units/pulse	

	3”	4”	6”	8”	10”	12”
High Frequency (pulse/gal)	25.228	16.362	6.307	3.344	2.15	1.530

Conductivity	>20 microSiemens/cm
Empty Pipe Detection	Hardware/software, conductivity-based
Environmental	NEMA 4X Standard (IP68 Option)

**Specifications subject to change. Please consult our website for the most current data (www.seametrics.com).*
***Extended battery life option is standard on all IP68 meters.*

AG2000
Irrigation Magmeter

OUTPUT CAPABILITIES

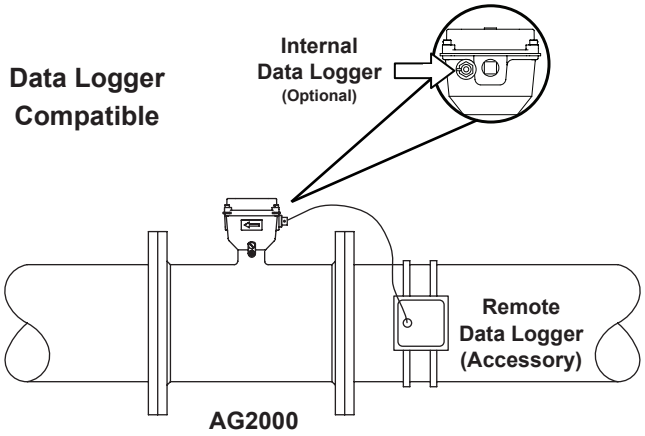

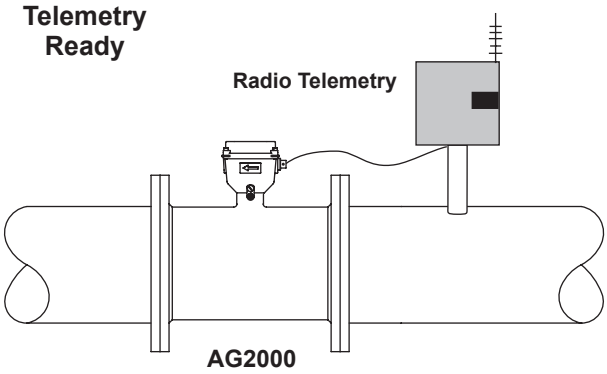

DIMENSIONS

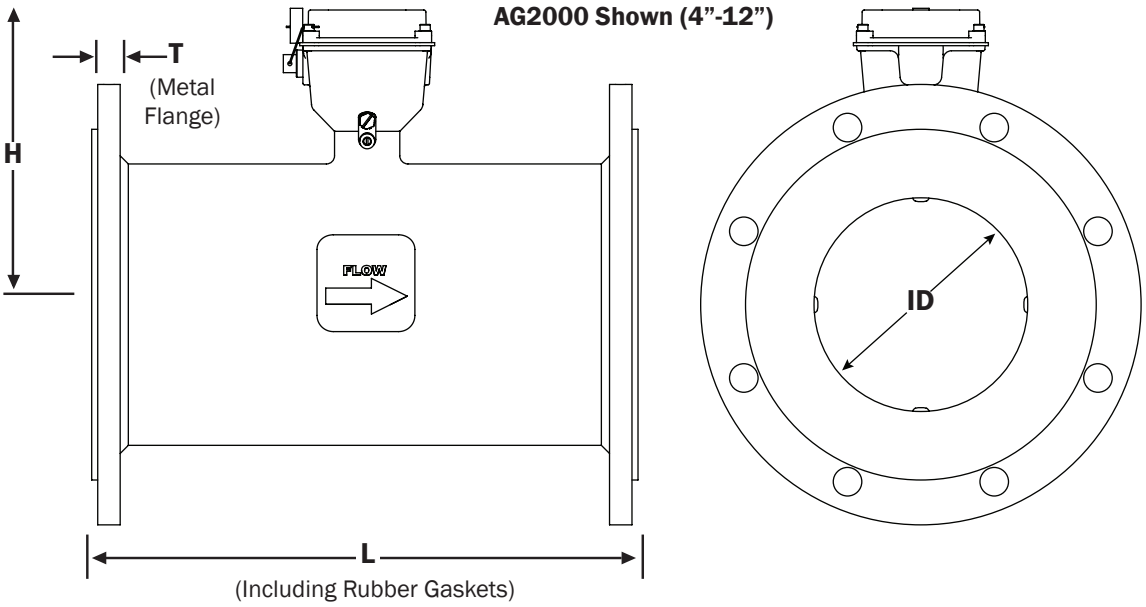

AG2000 (Standard Housing)

Standard AG2000 Meter Size	L		H		T		ID		Shipping Weight Standard	
	inch	mm	inch	mm	inch	mm	inch	mm	pounds	Kg
4”	10.24	260	7.0	178	.62	20.9	3.12	79.25	32	15
6”	12.27	312	8.1	206	.69	23.3	5.05	128.27	47	21
8”	14.24	362	9.1	231	.69	23.3	6.44	163.58	69	31
10”	18.18	462	10.1	257	.69	23.3	8.61	218.69	125	57
12”	19.68	500	11.1	282	.81	20.6	10.55	267.97	145	66
Flanges	Standard ANSI 150 lb. drilling								Cable (AG2000) 1 lb.	

AG2000
Irrigation Magmeter

DIMENSIONS

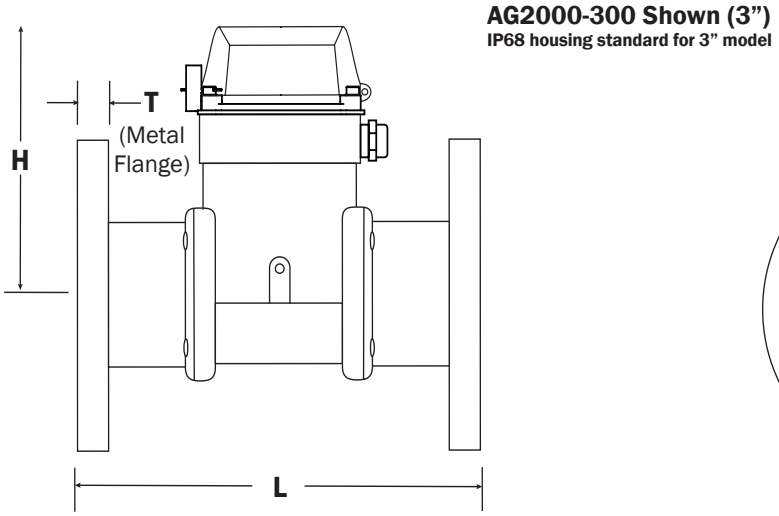

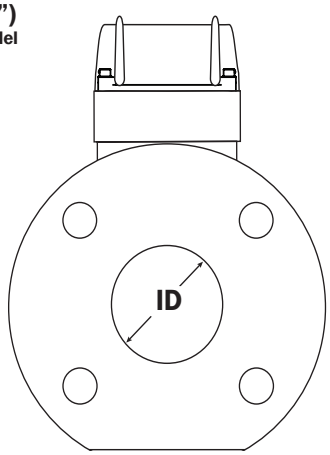

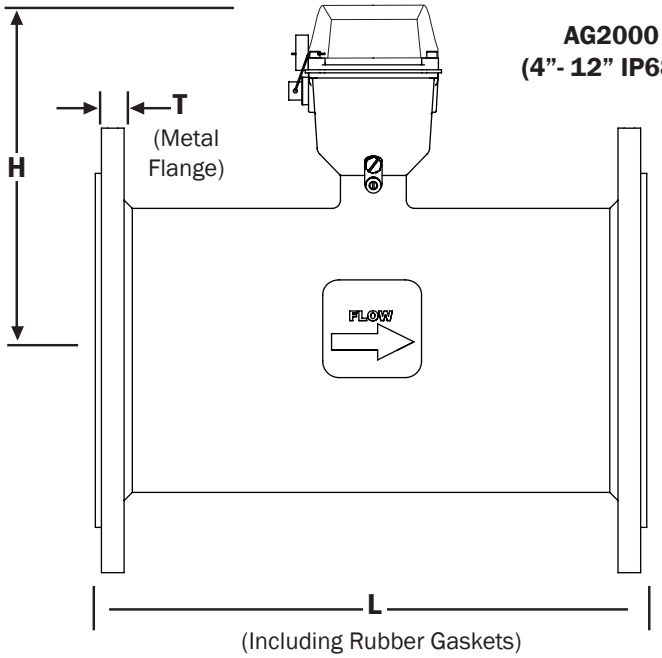

(Including Rubber Gaskets)

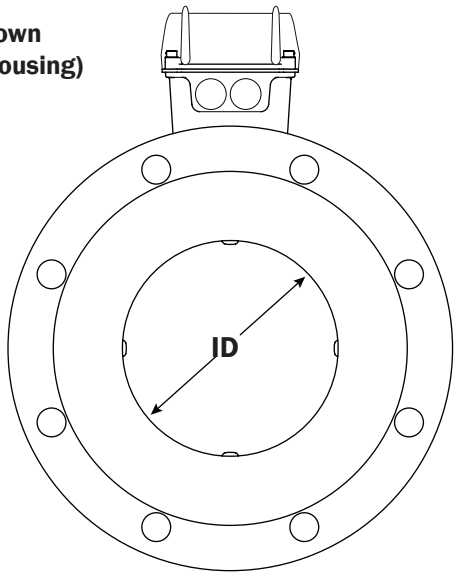

AG2000 with IP68 Housing (-168 option)

IP68 AG2000 Meter Size	L		H		T		ID		Shipping Weight IP68 Version	
	inch	mm	inch	mm	inch	mm	inch	mm	pounds	Kg
3”	12.0	305	6.80	173	.68	17.3	2.60	66.04	41	19
4”	10.24	260	8.12	206	.62	20.9	3.12	79.25	35	16
6”	12.27	312	9.22	234	.69	23.3	5.05	128.27	50	23
8”	14.24	362	10.22	260	.69	23.3	6.44	163.58	72	33
10”	18.18	462	11.22	285	.69	23.3	8.61	218.69	128	58
12”	19.68	500	12.28	312	.81	20.6	10.55	267.97	148	67
Flanges	Standard ANSI 150 lb. drilling								Cable (AG2000) 1 lb.	

STRAIGHT PIPE RECOMMENDATIONS

(X = pipe diameter)

Minimal straight pipe required between elbows.

For other piping configurations, consult factory.

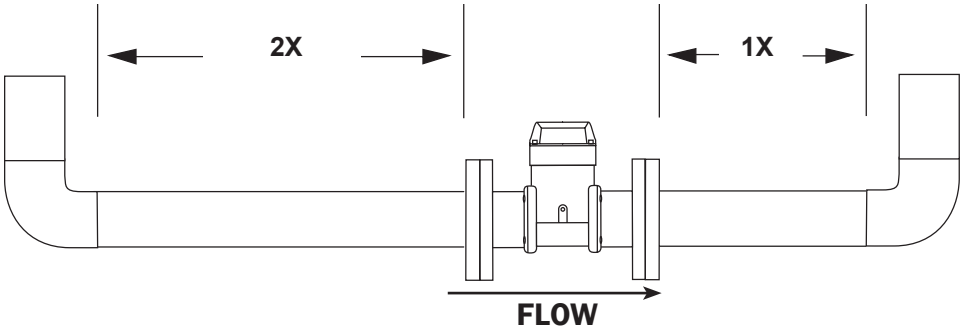

(X = pipe diameter)

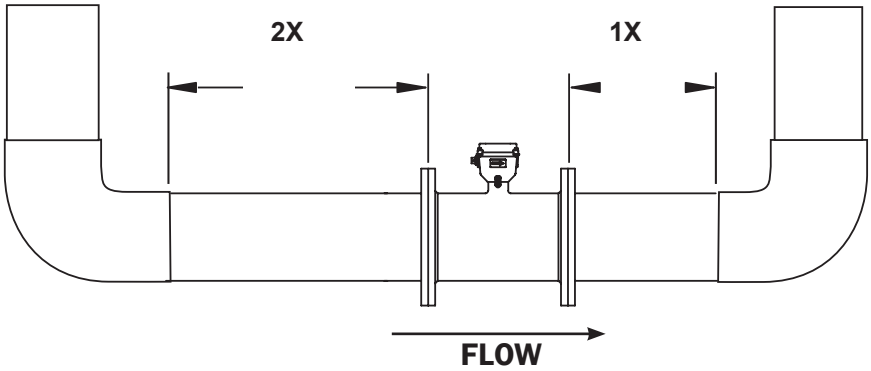

FLOW RANGE (3” - 12”)

Meter Size	3”		4”		6”		8”		10”		12”	
	Gal/Min	Liter/Sec	Gal/Min	Liter/Sec	Gal/Min	Liter/Sec	Gal/Min	Liter/Sec	Gal/Min	Liter/Sec	Gal/Min	Liter/Sec
Minimum	7.5	.47	12	.75	32	2	60	3.8	95	6	130	8.2
Maximum	700	44.2	1,000	63	2,400	151.4	4,400	277.6	7,000	441.6	10,000	630.9

AG2000
Irrigation Magmeter

HOW TO ORDER

MODEL

AG2000

SIZE

3” = **-300***

4” = **-400**

6” = **-600**

8” = **-800**

10” = **-1000**

12” = **-1200**

*-300 available in IP68 only

OPTIONS

Factory Installed Power/ Output Cable:
6m (20 ft) = **-11/6**
15m (50 ft) = **-11/15**
30m (100 ft) = **-11/30**

Factory Installed IP68 Power/Output Cable:
6m (20 ft) = **-11/6S**
15m (50 ft) = **-11/15S**
30m (100 ft) = **-11/30S**

Internal Data Logger = **-127**
Serial Output = **-131**
IP68 Submersible = **-168**
Extend. Battery Life[1] = **-178**

[1] Extended battery life is standard on all IP68 meters

PULSE RATE
(With Option -11)

10 Units*/Pulse = **-PxX**

100 Units*/Pulse = **-PxH**

1000 Units*/Pulse = **-PxK**

High Frequency**= **-HF**

*Units = Gal or Liter depending on Rate/Total unit selection

**High Frequency pulse rate will shorten battery life

UNITS

Gal/Min	= **GPM**	Gal	= **G**
Liter/Min	= **LPM**	Gal x 1000	= **GT**
Cu Ft/Min	= **CFM**	Liter	= **L**
Cu Meter/Hr	= **CMH**	Liter x 1000	= **LT**
Gal/Sec	= **GPS**	Mega Liters	= **ML**
Liters/Sec	= **LPS**	Cubic Meters	= **CM**
Cu Ft/Sec	= **CFS**	Cu Met x 1000	= **CMT**
Miner’s In**	= **MI**	Acre Feet	= **AF**
Cu Met/Min	= **CMM**	Cubic Feet	= **CF**
		Cu Feet x 1000	= **CFT**
		Million Gal	= **MG**
		Miner’s Inch Day	= **MID**
		Acre Inch	= **AI**

Consult factory for additional units
Any rate selection can be combined with any total selection
** 1 Miner’s Inch = 1.2 CFM

ACCESSORIES

Remote 4-20 mA (analog) signal = **AO55W**

Remote Rate and Total Indicator (Battery) = **FT415W***

Remote Rate and Total Indicator (Powered) = **FT420W***

Remote Data Logger = **DL76W**

Dual Power Supply, 115 Vac, 12/24 Vdc = **PC42**
(Use with High Frequency pulse rate)

Replacement Battery Pack = 100889

Weather Guard = **100961**

Post-Factory 20-ft. Power/Output Cable (Standard Housing Only) = **DC30**

Post-Factory 50-ft. Power/Output Cable (Standard Housing Only) = **DC35**

Post-Factory 20-ft. Power/Output Cable (IP68 Housing Only) = **DC30S**

Post-Factory 50-ft. Power/Output Cable

(IP68 Housing Only) = **DC35S**

Grounding Rings
(not needed for most applications):

3” = **102157**

4” = **100876**

6” = **100877**

8” = **100878**

10” = **100879**

12” = **103288**

*Consult customer service to determine the appropriate indicator based on the distance it will be installed from the meter.

CONTACT YOUR SUPPLIER

Seametrics Incorporated • 19026 72nd Avenue South • Kent, Washington 98032 • USA
(P) 253.872.0284 • (F) 253.872.0285 • 1.800.975.8153 • www.seametrics.com

LT-65650278-Rev A
2/15

Propeller

CONFIGURATION SHEET

MODEL MT100

THREADED END FLOWMETER

DESCRIPTION

The Model MT100 is manufactured to comply with the applicable provisions of the American Water Works Association Standard No. C704-02 and latest revisions for propeller type flowmeters. The threaded ends of the MT100 allow it to be directly coupled into an existing pipeline. The carbon steel flow tube has a fusion-bonded epoxy coating offering excellent corrosion protection. As with all McCrometer propeller flowmeters, standard features include a magnetically coupled drive, instantaneous flowrate indicator and straight-reading, six-digit totalizer.

Impellers are manufactured of high-impact plastic, capable of retaining their shape and accuracy over the life of the meter. Each impeller is individually calibrated at the factory to accommodate the use of any standard McCrometer register, and since no change gears are used, the MT100 can be field-serviced without the need for factory recalibration. Factory lubricated stainless steel bearings are used to support the impeller shaft. The shielded bearing design limits the entry of materials and fluids into the bearing chamber providing maximum bearing protection.

An instantaneous flowrate indicator is standard and available in gallons per minute, cubic feet per second, liters per second and other units. The register is driven by a flexible steel cable encased within a protective self-lubricating liner. The register housing protects both the register and cable drive system from moisture while allowing clear reading of the flowrate indicator and totalizer.

INSTALLATION

Standard installation is horizontal mount. If the meter is to be mounted in the vertical position, please advise the factory. A straight run of full pipe the length of ten pipe diameters upstream and two diameters downstream of the meter is recommended for meters without straightening vanes. Meters with optional straightening vanes require at least five pipe diameters upstream and two diameters downstream of the meter.

The McCrometer Propeller flowmeter comes with a standard instantaneous flowrate indicator and straight-reading totalizer. An optional FlowCom register is also available. *Typical face plates.*

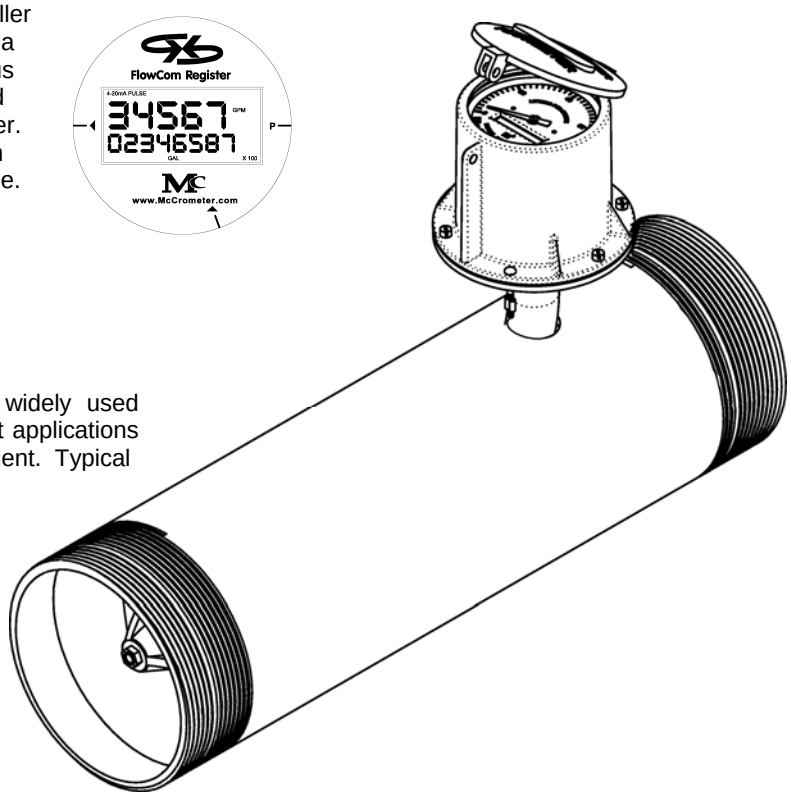

APPLICATIONS

The McCrometer propeller meter is the most widely used flowmeter for municipal and wastewater treatment applications as well as agricultural and turf irrigation measurement. Typical applications include:

- Water and wastewater management
- Truck loading and discharge
- Sprinkler irrigation systems
- Drip irrigation systems
- Golf course and park water management
- Commercial nurseries

©1999-2012 by McCrometer/Printed in U.S.A.
Lit#24517-19 Rev 2.2/10-12

McCROMETER
3255 West Stetson Avenue
Hemet CA 92545 USA
951-652-6811 / FAX 951-652-3078
www.mccrometer.com

THREADED END FLOWMETER MODEL MT100

SPECIFICATIONS

PERFORMANCE

ACCURACY/REPEATABILITY: ±2% of reading guaranteed throughout full range; ±1% over reduced range; Repeatability 0.25% or better
MAXIMUM TEMPERATURE: (Standard Construction) 160°F constant
PRESSURE RATING: 150 psi

MATERIALS

BEARING ASSEMBLY: Impeller shaft is 316 stainless steel. Ball bearings are 440C stainless steel.
MAGNETS: (Permanent type) Alnico
BEARING HOUSING: Brass; Stainless Steel optional
REGISTER: An instantaneous flowrate indicator and six-digit straight-reading totalizer are standard. The register is hermetically sealed within a die cast aluminum case. This protective housing includes a domed acrylic lens and hinged lens cover with locking hasp.
IMPELLER: Impellers are manufactured of high-impact plastic, retaining their shape and accuracy over the life of the meter. High temperature impeller is optional.
FLOW TUBE: Fusion-bonded epoxy-coated carbon steel threaded to NPT. (Other thread standards available.)

OPTIONS

- Forward/reverse flow measurement
- Register extensions
- All stainless steel construction
- High temperature construction
- "Over Run" bearing assembly for higher than normal flowrates
- Electronic Propeller meter available in all sizes of this model
- A complete line of recording/control instrumentation can be driven from this flowmeter
- Certified calibration test results
- Canopy boot

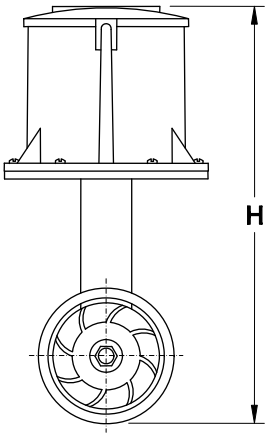

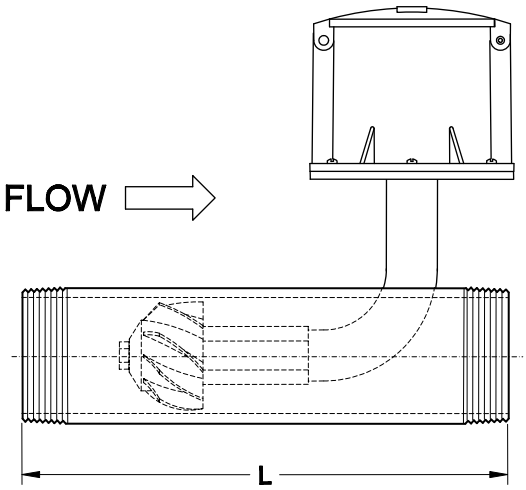

McCrometer reserves the right to change design or specifications without notice.

MT100	DIMENSIONS				
Meter Size	**2"**	**2 ½"**	**3"**	**4"**	**6"**
Maximum Flow U.S. GPM	250	250	250	600	1200
Minimum Flow. U.S. GPM	35	35	40	50	90
Approx. Head Loss in Inches at Max. Flow	29.50	29.50	29.50	23	17
Approx. Shipping Weight-lbs.	* SEE SPECIAL NOTE		17	40	42
H (inches)			10	13	14
L (inches)			13	20	22
O.D. of Meter Tube			3.50	4.500	6.625

Larger flowmeters on special order.
*SPECIAL NOTE — Reducing fittings are supplied to adapt the 3-inch model to smaller line sizes.

FOR MORE INFORMATION CONTACT:

©1999-2012 by McCrometer/Printed in U.S.A.
Lit#24517-19 Rev 2.2/10-12

McCROMETER
3255 West Stetson Avenue
Hemet CA 92545 USA
951-652-6811 / FAX 951-652-3078
www.mccrometer.com

MW500 MW600 MG/MW900 MT904 MT906

McCROMETER

FILE: 24517-11-07.dwg

DESC 4" THRU 24" TOP PLATE METERS

BY	CEH	DATE	9-23-1993	APP	EDM	DATE	6-9-2007

NOTES:
1. XX DEPENDS ON SPECIFIC REQUIREMENT
2. DRAWING IS NOT SHOWN TO SCALE.

SIZE	REGISTER (1)	BEARING (2)	PROPELLER (3)	LINER (4)	CABLE (5)	ELL-ASSY (6)	BOLT (7)	O-RING (8)
4"	R1104-XX	B0610-XX	P10105-XX	D0304-00	D0104-00	LQ204-10	10103-00 (6)	T0390-00
6"	R1106-XX	B0110-XX	P0106-XX	D0304-00	D0104-00	L0205-10	10103-00 (8)	T0390-10
8"	R1108-XX	B0110-XX	P0108-XX	D0303-00	D0122-00	L0206-10	10103-00 (8)	T0390-10
10"	R1110-XX	B0110-XX	P0110-XX	D0313-00	D0123-00	L0207-10	10050-00 (12)	T0399-10
12"	R1112-XX	B0110-XX	P0112-XX	D0306-00	D0106-00	L0208-10	10050-00 (12)	T0399-10
14"	R1114-XX	B0110-XX	P0112-XX	D0306-00	D0106-00	L0209-10	10050-00 (12)	T0399-10
16"	R1116-XX	B0110-XX	P0112-XX	D0307-00	D0107-00	L0210-10	10050-00 (12)	T0399-10
18"	R1118-XX	B1510-XX	P0116-XX	D0307-00	D0107-00	L0211-10	10099-00 (16)	T0399-11
20"	R1120-XX	B1510-XX	P0116-XX	D0308-00	D0108-00	L0212-10	10099-00 (16)	T0399-11
24"	R1124-XX	B1510-XX	P0116-XX	D0309-00	D0109-00	L0213-10	10099-00 (16)	T0399-11

PLEASE HAVE THE METER SERIAL NUMBER WHEN ORDERING REPLACEMENT PARTS

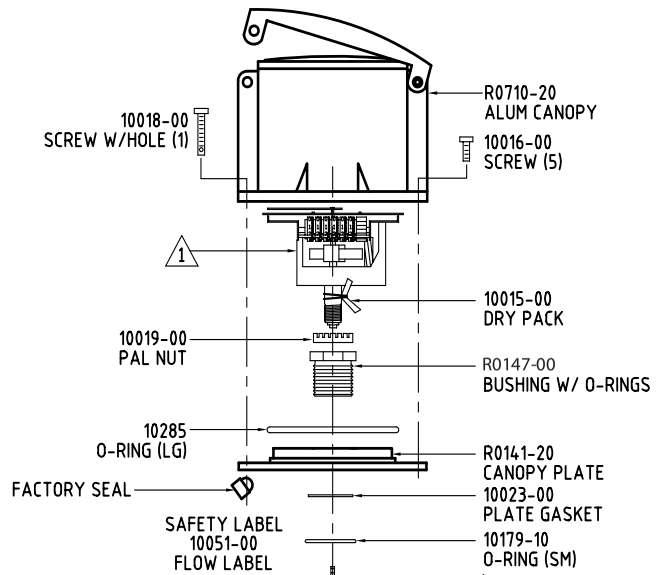

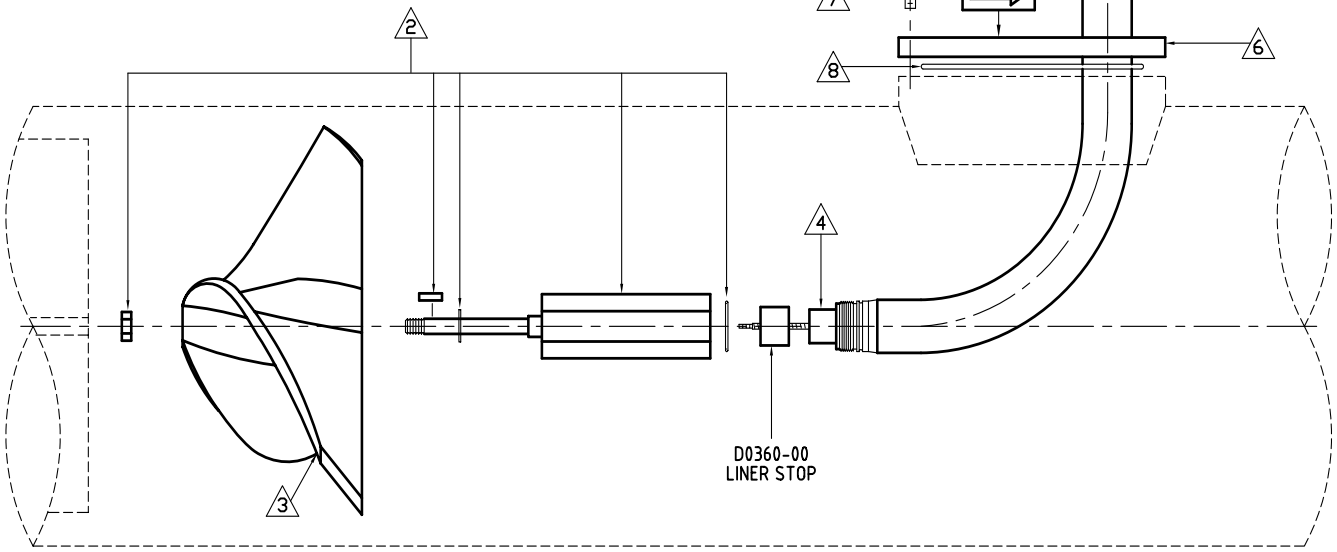

THIS DOCUMENT CONTAINS PROPRIETARY INFORMATION AND MAY NOT BE DISCLOSED TO OTHERS FOR ANY PURPOSE, NOR USED FOR MANUFACTURING PURPOSES WITHOUT WRITTEN PERMISSION FROM MCCROMETER, INC.

REV	5	7-12-2011 JT

old sparling Flow meter

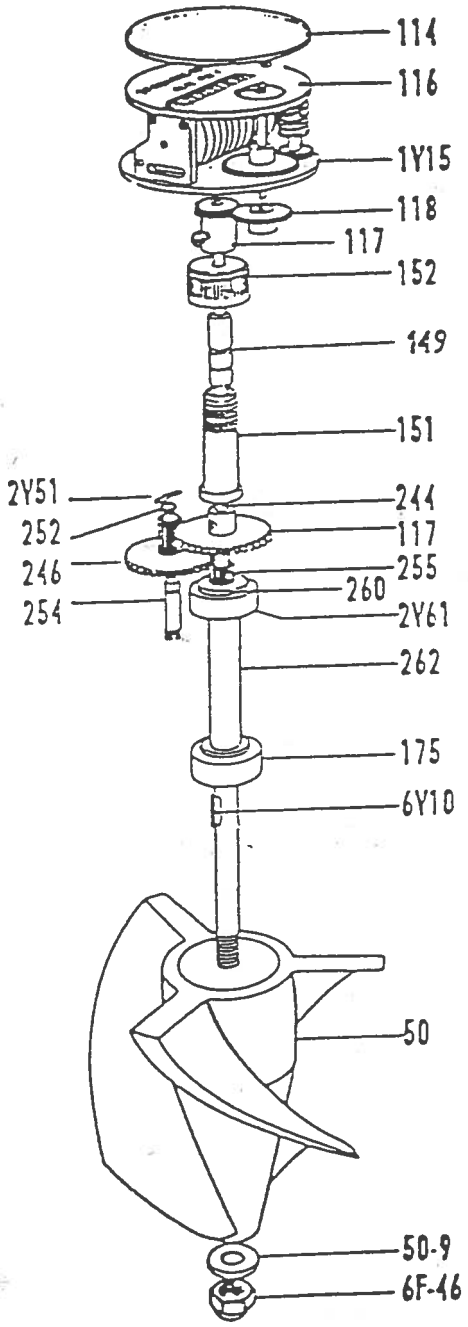

WATER SPECIALTIES CORPORATION

PORTERVILLE, CALIFORNIA 93257 U.S.A.

PHONE 209-784-3544
TELEX 230-176771 WATERSPEC
FAX 209-784-1787

AUTHORIZED DISTRIBUTOR:

Sparling Inline propeller

2" - 20"

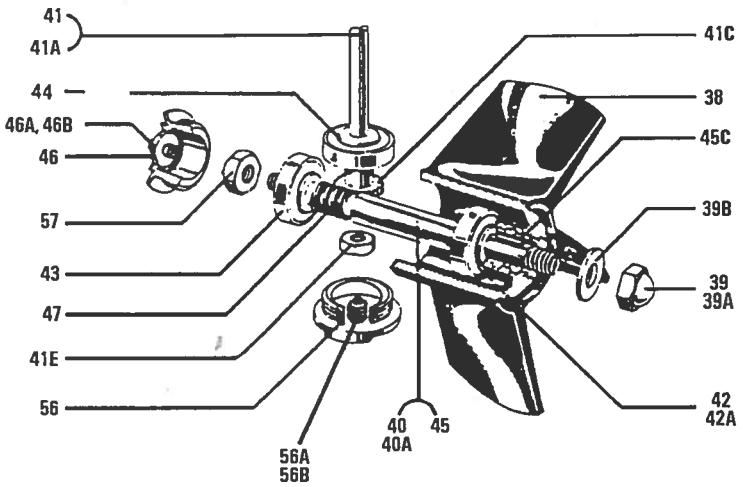

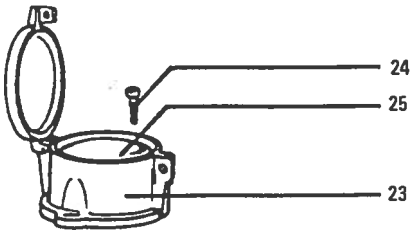

24" - 42"

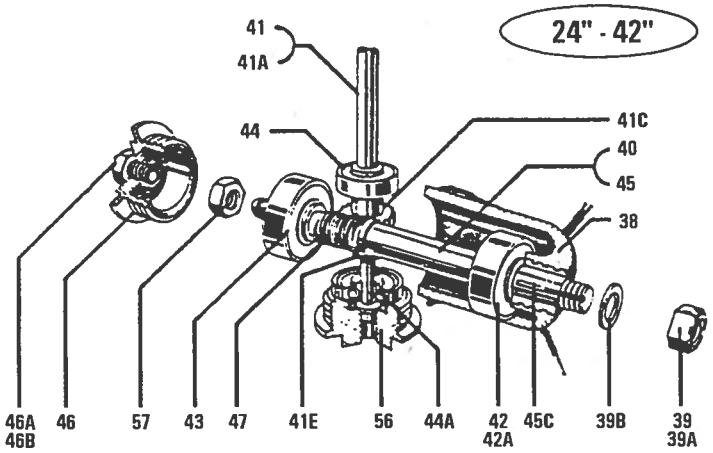

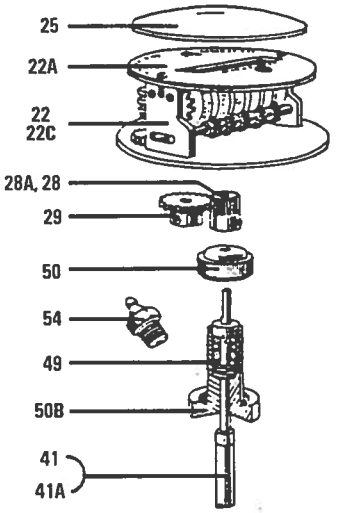

48" - 72"

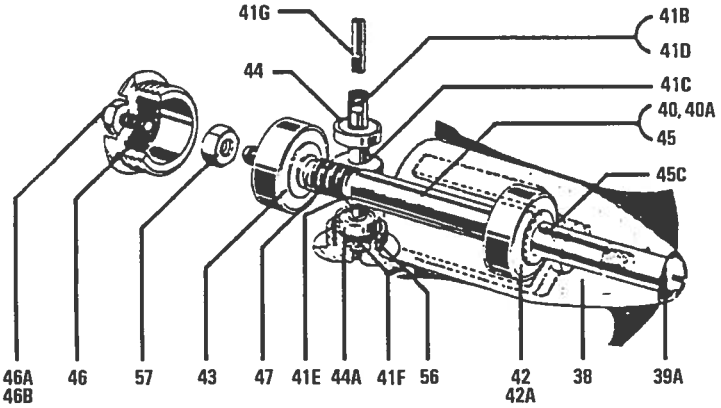

Authorized Factory Representative

TechnoFlo

S Y S T E M S

P.O. Box 1448 • Porterville, CA 93258
Ph. 559-783-1207 • Fax 559-783-1209
www.technoflo.com

AUTHORIZED DISTRIBUTOR:

ATTACHMENT 6 - DISTRICT'S RULES AND REGULATIONS

LINDMORE IRRIGATION DISTRICT
RULES AND REGULATIONS
ADOPTED BY ACTION OF THE BOARD ON MARCH 12, 2013

NOTE: INFORMATION IN THE BODY OF THE RULES THAT ARE IN BOLD INDICATE A POLICY CHANGE FROM PRIOR YEARS. PLEASE CONTACT THE DISTRICT OFFICE IF YOU NEED CLARIFICATION OF ANY RULES.

ALLOCATION OF WATER

1. At the beginning of each irrigating season all water allocated to the Lindmore Irrigation District by the United States Bureau of Reclamation shall be pro-rated to each acre of land within the District equally according to the latest Assessed Valuation of the land (Article 2, Section 22250, Water Code of the State of California). (Board Policy exception – See item #3). Billings for the use of water will be billed monthly based on the quantity of water used by each landowner during the preceding month.

2. Unused quantities pro-rated water will be billed after the end of the season and payment shall be due no later than December 31 of each year. The end of the season will be when the distribution system operation is closed down for maintenance and pipeline replacement (generally the day before Thanksgiving). Unused water shall not be carried over to succeeding irrigation years.

3. No water shall be apportioned to parcels of five acres or less unless a specific request is made by the landowner. The standby charge will remain on those parcels that requested pro-rate.

4. Water pro-rated to any parcel may be transferred from one parcel of land to another, and from one parcel to another, including to other landowners within the boundaries of Lindmore Irrigation District (Article 2, Section 22250, Water Code). Prior to said transfer all current standby, water charges or fees due the District must be paid in full. Forms for such transfer may be secured at the Lindmore Irrigation District office. Such transfers can occur anytime during the operating water season (typically March 1 through the Monday before Thanksgiving). Landowners with the need and ability to beneficially use water in excess of their pro-rated allotment may contact the District to inquire if additional water is available due to another landowner's nonpayment of District fees such as the nonpayment of standby charges that have resulted in liens being placed on such property. Upon such an inquiry, the District hereby determines, pursuant to the Public Records Act, to release the names and addresses (but not usage records pursuant to Government Code § 6254.16) of landowners that the District has recorded liens on and who are not current on all payments so that the inquiring landowner may contact the delinquent landowner regarding a proposed transfer. Notwithstanding anything to the contrary, no transfer may occur without either the inquiring landowner or the delinquent landowner first paying all current standby, water charges and/or other fees due to the District. Once the transfer is approved, the obligation to pay for the water transferred shall be an obligation of the transferee.

5. All water introduced into the District is the property of the District and is subject to diversion, control and use by the District. No landowner or consumer acquires any proprietary right in the water by reason of such use, nor does such landowner or consumer acquire any right to resell or transfer (other than as provided herein) the water purchased or used, nor the right to use it on the premises or for a purpose other than that for which it was applied.

If a party uses water on land outside the District that was applied for use within the District, whether by routing through a conduit, first flowing the water through the land within the District, by recapturing it from drains, or otherwise, the District may (i) refuse future service; (ii) charge for the use of water on the outside land, at a rate fixed by the Board; and/or (iii) condition further receipt of water upon the landowner making such physical changes in his fields or irrigation system that the Board deems necessary and adequate to assure the District that no future use of District water to outside lands will occur.

6. Landowners having water entitlements greater than they can use will be allowed to assign their excess water to the "District Common Pool" for use by other growers in the District. However, Landowner shall not be relieved from his/obligation to pay for pro-rated supply until all water in the pool is used. If there is a balance in the pool at the end of the operating season, the assignee will be responsible to pay for an amount of the water in the pool in proportion to the relationship of pro-rated water to the total pool, and will then be billed for the water as unused. The annual deadline for the pool is typically the last business day of July. However, in the annual allocation and rate letter this date will be noted.

DISTRIBUTION OF WATER

7. The distribution of water shall be under the general supervision of the Operations Officer.

8. Orders for turn-on and turn-off shall be made at the office of the District, or telephoned to the office (559) 562-2534. No orders except those made through the office as above directed are authorized or accepted.

9. Orders for turn-on and turn-off shall be made not later than 9:00 o'clock in the morning of the day before the delivery of water is requested. Orders will be accepted any time during the day, for delivery at a time later than the following day.

10. No changes in water delivery, except for emergencies, will be made on Sundays.

11. No order for a flow of less than ten inches will be accepted for delivery through a six inch or larger meter, except where the user is willing to accept a charge for a ten inch flow, or to install a smaller meter or adapter at their cost.

12. On the day the water is ordered on or off, the watertender will service the meter at the time he passes on his regular run for the day. Orders for a certain hour cannot be accepted, but the watertender will co-operate with the wateruser as far as is possible to do so compatible with the efficient operation of the system. It is the wateruser's responsibility to see that the meter has been turned on or off as ordered.

13. When water has been turned on it shall run continuously day and night at the flow set by the watertender until he turns it off, and no turn-on will be made for runs of less than 24 hours. Changes to the flow must be called in to the District and a District staff person shall make the necessary adjustment. Excessive call backs during regular work periods will result in a charge (see Fines/Charges below). Call backs after regular hours, except for a District emergency or a power failure, will be assessed a charge (see Fines/Charges below).

14. Water used each month will be billed the first part of the following month.

15. Bills for water are due and payable at the office of Lindmore Irrigation District upon presentation.

16. Bills may be paid at the office of the District at **315 E. Lindmore Avenue in Lindsay, California** or payment may be mailed to Post Office Box 908, Lindsay, California 93247-0908.

17. If bills for water are not paid on or before the 25th (postmarks accepted) of the month the bills are presented, the account becomes delinquent and will be assessed a penalty.

18. A penalty for delinquent accounts (as noted above) will be charged at the rate of one and one half (1 ½) percent per month.

19. No water will be delivered to any land upon which there is a delinquent water account. Similarly, delinquent landowners shall not be allowed to transfer water to another landowner within the District without first bringing all delinquent accounts current and paid in full.

20. No water will be delivered to any land if the wateruser's stand-by account is delinquent.

Though an allocation of water will occur on all eligible accounts at the beginning of the water season, Landowners must have all delinquent accounts cleared prior to receiving project water.

GENERAL

21. The Board of Directors of Lindmore Irrigation District may regulate the use of water to prevent waste (Article 2, Section 22250, Water Code).

22. The landowner will be responsible for any leaks developing in the discharge side of meter stands.

23. No person shall modify, molest, tamper with or interfere with structures or devices used for the delivery of water owned by the district (typically all items before the turnout valve) without express written permission of the District.

24. The structures and lines of the District's system shall neither be used for the application of fertilizer nor for any other purpose which might damage or interfere with the operation of the system.

25. Water furnished by Lindmore Irrigation District shall not be used for drinking purposes, is not treated to make it safe for drinking purposes, and any person making such use of Lindmore water does so contrary to the purpose of the District, violating this definite order of the Board of Directors of the District at your own risk.

26. Any landowner in the Lindmore Irrigation District who sells a portion of a parcel of land served by one meter shall reach an agreement with the buyer relative to water service, and if such agreement indicated the installation of another meter, such meter shall be installed by Lindmore Irrigation District at its convenience and all costs of the installation shall be paid by either the seller of the land or the purchaser, as their agreement sets forth.

27. Persons interfering with the regulation of water in the District conduits are subject to prosecution and or fines. If any person takes water without permission of the District or authorized District staff, they may be subject to criminal prosecution and fines.

28. All water introduced into the District by District works is District water and is subject to re-diversion and use by the District. All such water, whether waste and/or seepage water, intercepted and used by consumers will be charged for at the rate established by the District. All return flows from water served by the District shall become the property of the District when such return flows enter a District lateral or surface drainage system, leave the boundaries of the landowner's property, or percolate into the District's sub-surface drainage system or other District facility. All such water, whether return flow, tail water, waste, and/or seepage water is subject to re-diversion and use by the District.

29. The agents, staff and employees of the District shall have free access at all times to the property being supplied with water from the District's system for the purpose of examining the lands irrigated, the flow of water thereon, the water facilities and any private canal, ditches, sumps or drains, and for any and all other lawful purposes.

30. Wateruser's shall be required at all times to keep their ditches and facilities for conveying and distributing waters in good condition so that water can be used without undue loss or unreasonable waste, and without damage to other lands. Lands must be prepared so that water can be distributed without waste and landowners shall construct adequate drainage facilities so that adjacent land will not be damaged. The District may refuse to deliver water to a consumer whose ditches and structures are not in a proper state of repair or whose land is not prepared to convey or use water in an economic and non-wasteful manner. Landowners shall use District water in a reasonable manner by applying said water to beneficial use.

EMERGENCIES

31. Under emergency circumstances, the District may be required to shut off all or some meters within in the District. If such an event occurs, District staff will inform all affected wateruser's when it is to be shut off and turned on whenever practicable.

32. To report an emergency or an emergency shut-off during business hours (weekdays at 7 am – 4:00 pm) simply call the District office at (559) 562-2534. During non-business hours, please call the District Emergency Response Phone at (559) 333-2386. The Emergency Response phone is with someone at all times. Additional numbers for emergency response (other than District issues) can be located in your phone book.

FINES/CHARGES

33. A $50.00 charge will be assessed to the wateruser's account for each emergency turn-off requested after regular working hours, unless due to loss of electrical power at the power company meter or when the event is a District operational malfunction.

34. A $150.00 fine will be made for turning on any water meter without following the proper ordering procedure and a $150.00 fine will be made for turning off a water meter without proper notification.

35. A $25.00 charge will be assessed to a wateruser's account for each emergency shut off/modification request during regular business hours (except for in the case of a District emergency or power supplier failure) in excess of three times per meter per year.

CHANGE IN RULES AND REGULATIONS

36. These rules and regulations are adopted in whole or part annually and may be amended or changed at any time by action of the Board of Directors of Lindmore Irrigation District.

ATTACHMENT 7 – MONTHLY WATER BILL EXAMPLE

Modify / Close Work Order: 58139

Modify / Close Work Order

Modify or close an unposted Work Order

Account	Field	Outlet	Crop	Placed By	Ac Ft Needed
KCRABR	322300	90.4-2.3N-1.71N			3.56

Meter Readings

Reading Type	Flow Meter No.		Reading Date	Meter Val	AcFt
TurnOn	45.00 406	...	6/3/2017	30.32	0.00
Correction	0.00 406	...	6/5/2017	30.32	3.56
TurnOff	0.00 406	...	6/5/2017	30.32	0.00

Land Type: Agriculture Gravity

Rate: 75.00

Total Acre Feet: 3.56

Total Value: 267.00

☑ Work Order is Closed

☐ Clone for Mid-Irrigation Billing

Save & Open | Save & Close | Close